FIG.6

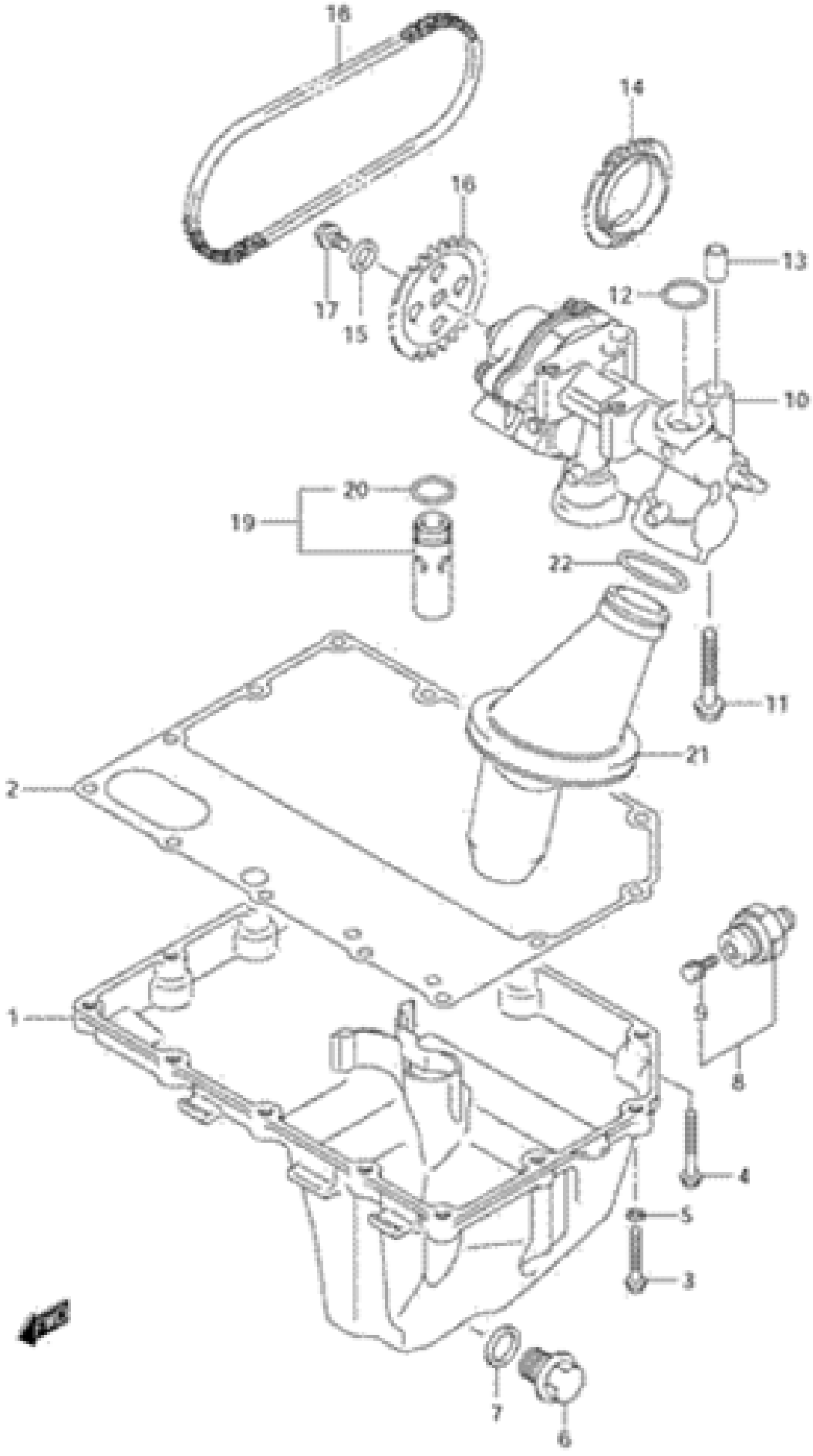

FIG.60

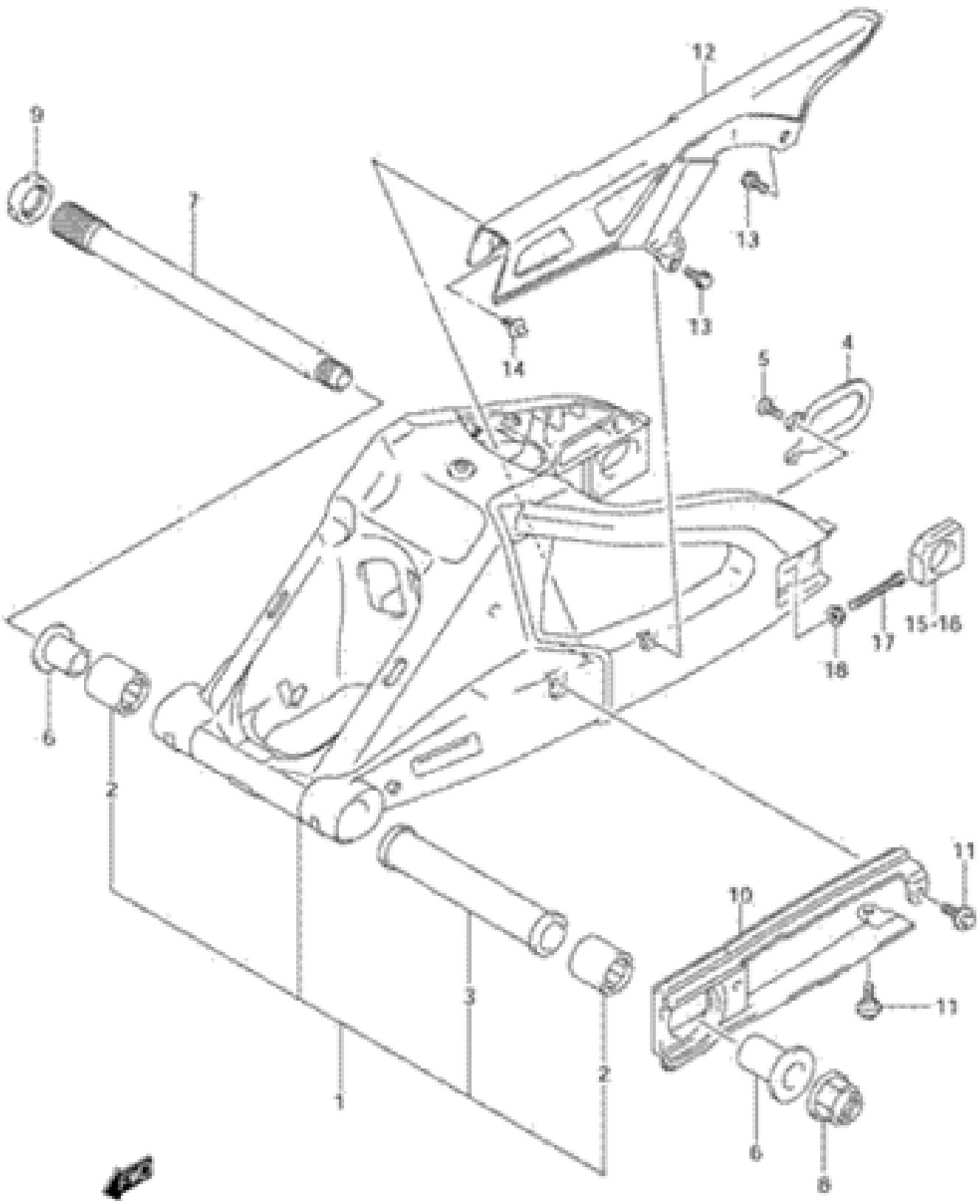

FIG.61

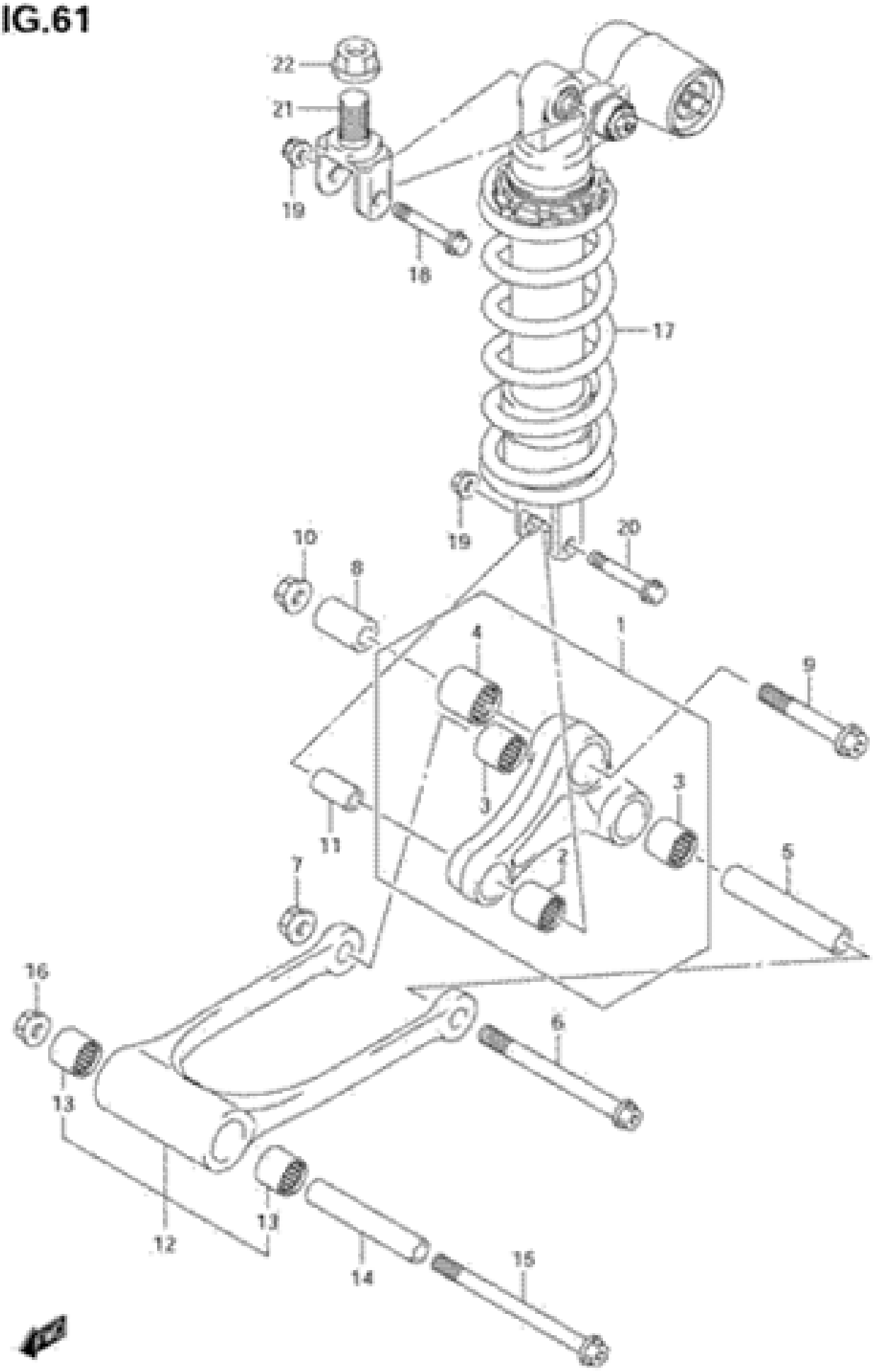

GSX-R600K6 E03 E28_061
REAR CUSHION LEVER

FIG.62

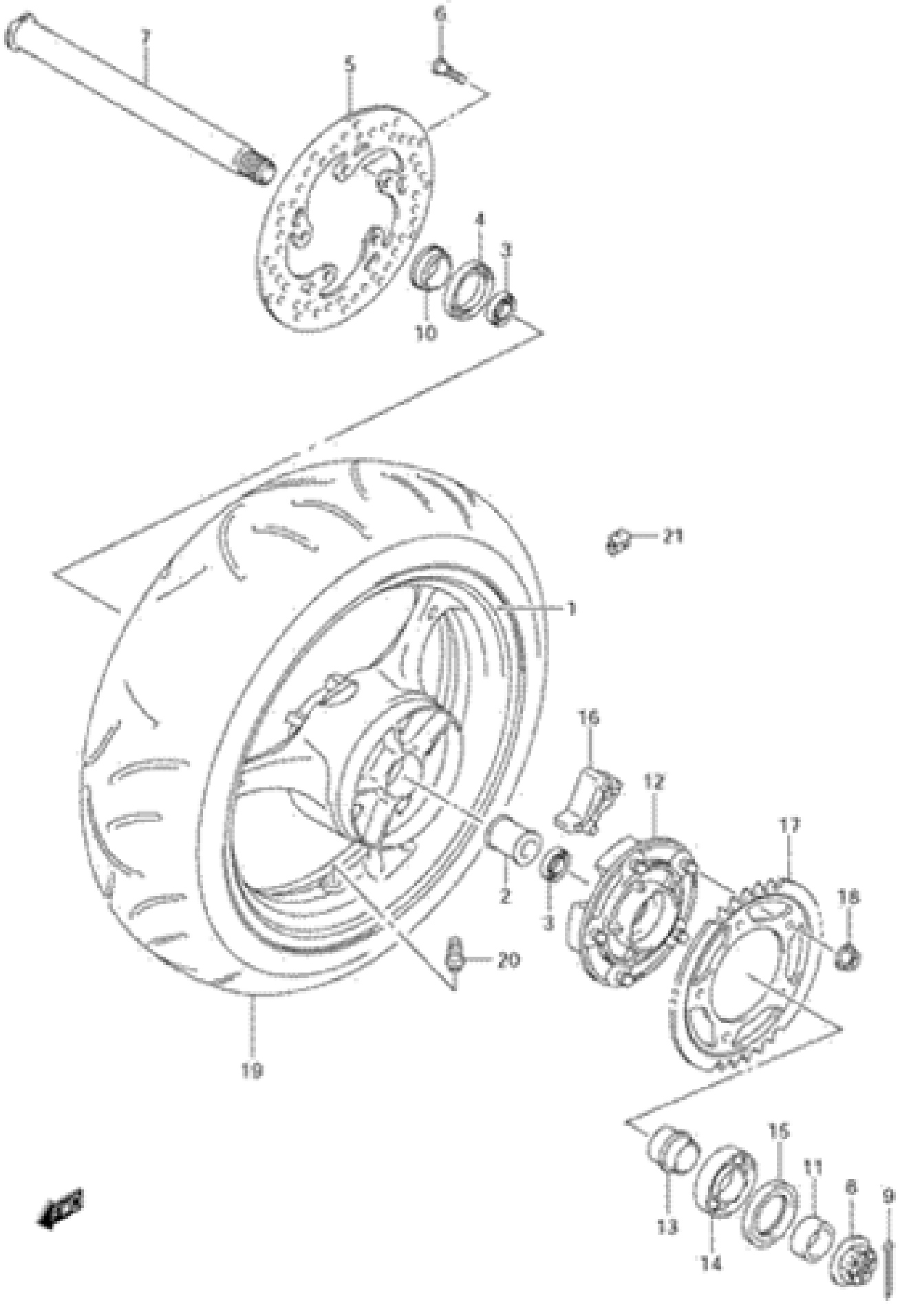

FIG.63

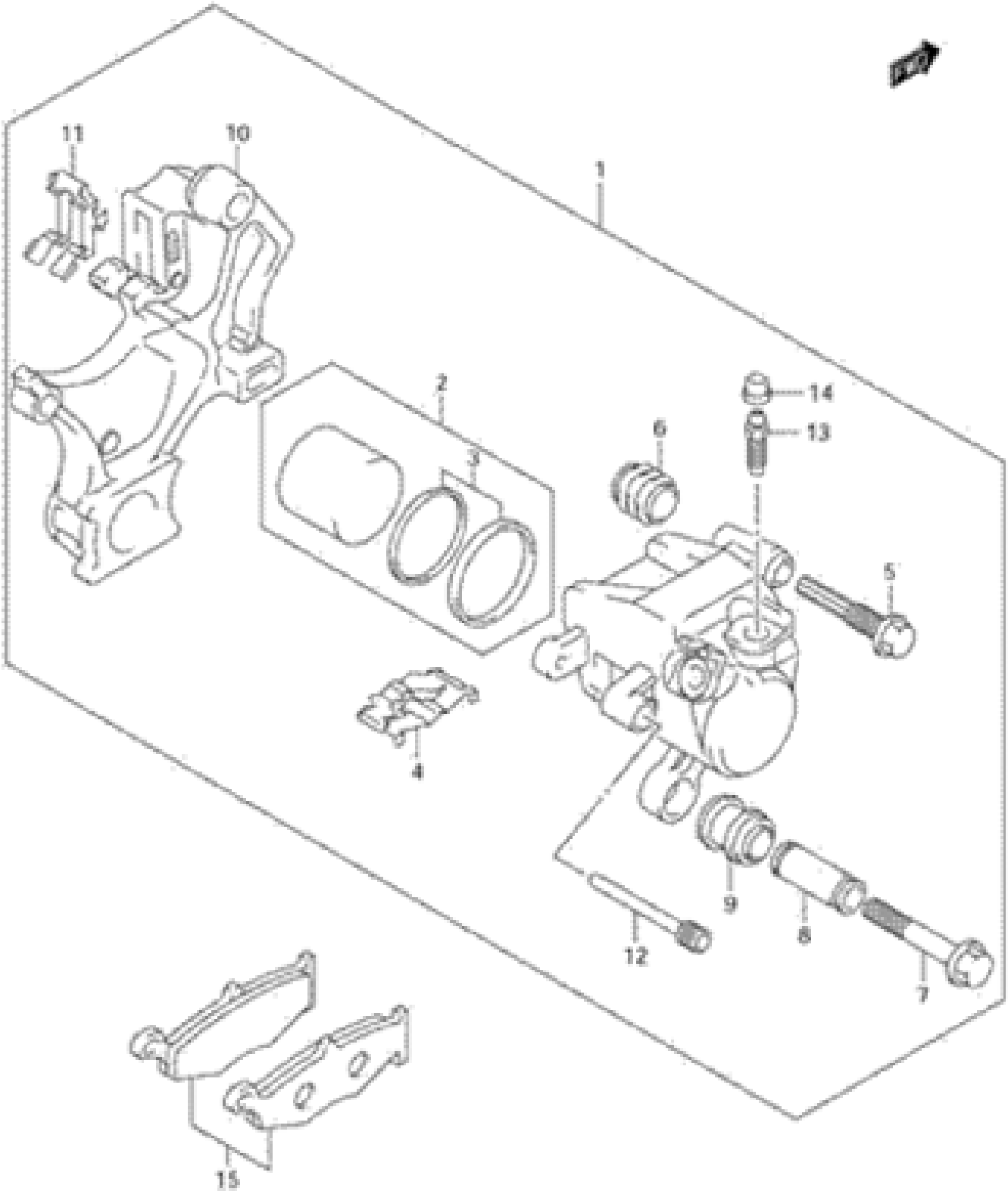

FIG.64

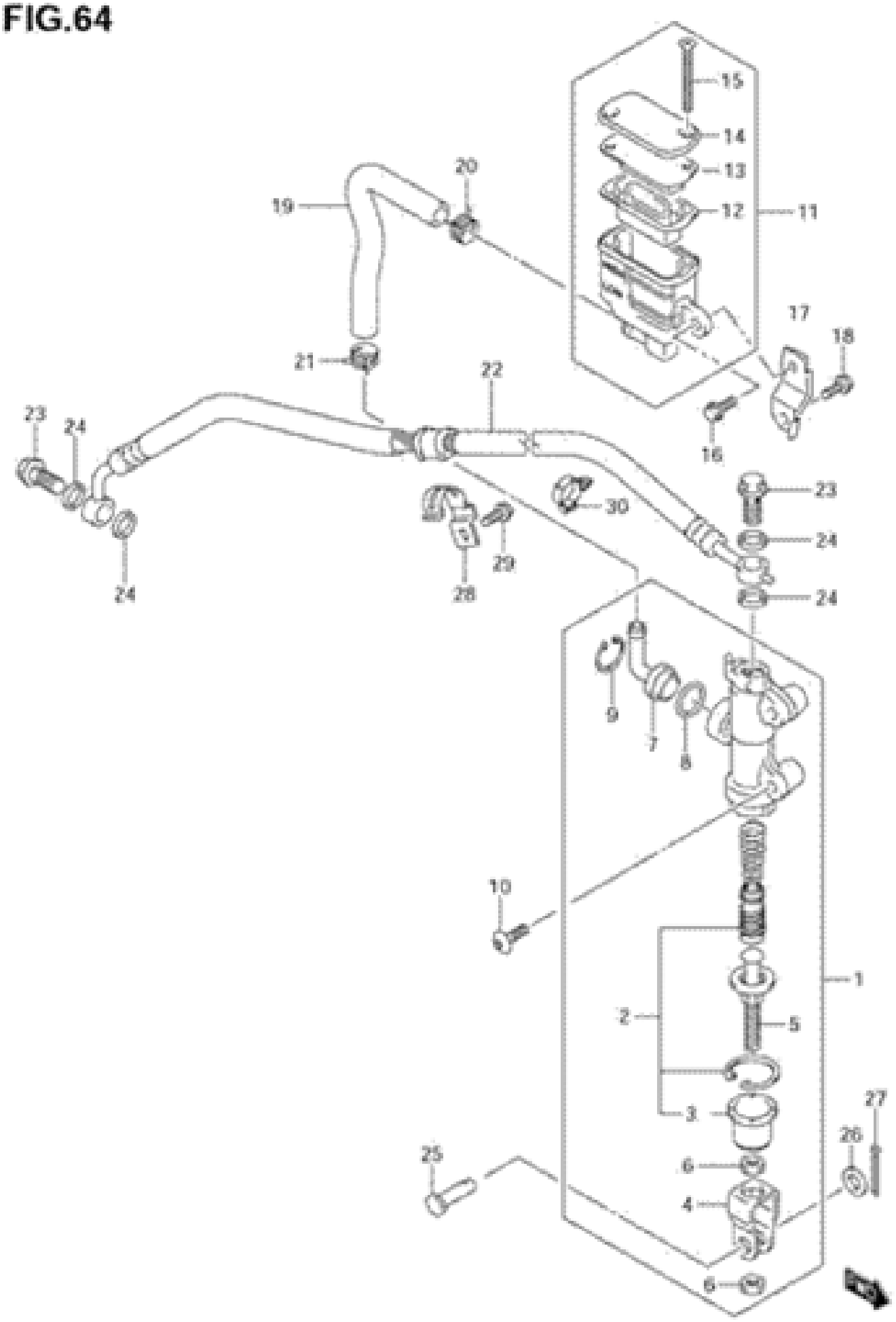

GSX-R600K6 E03 E28_064
REAR MASTER CYLINDER

FIG.65

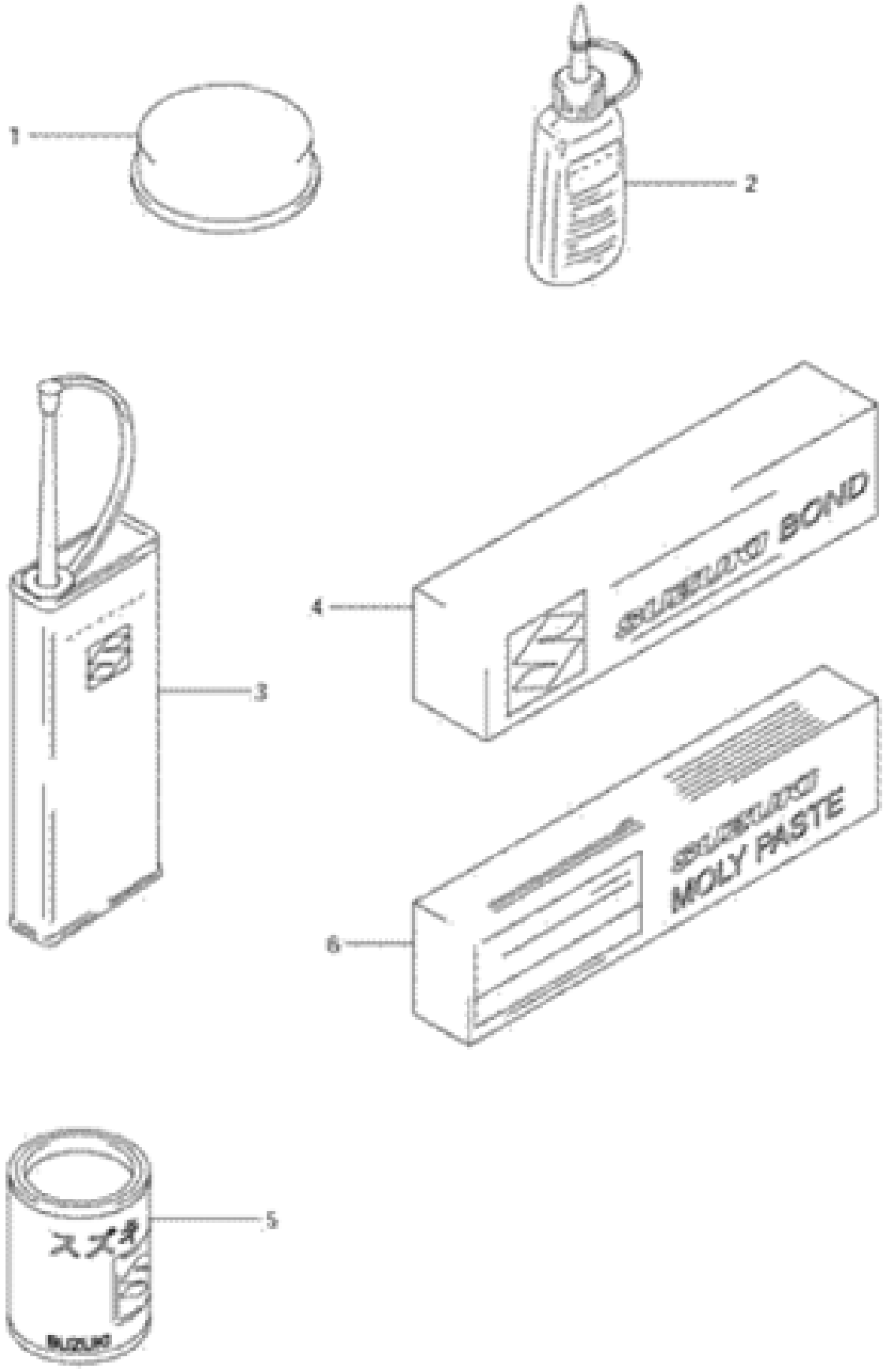

FIG.7

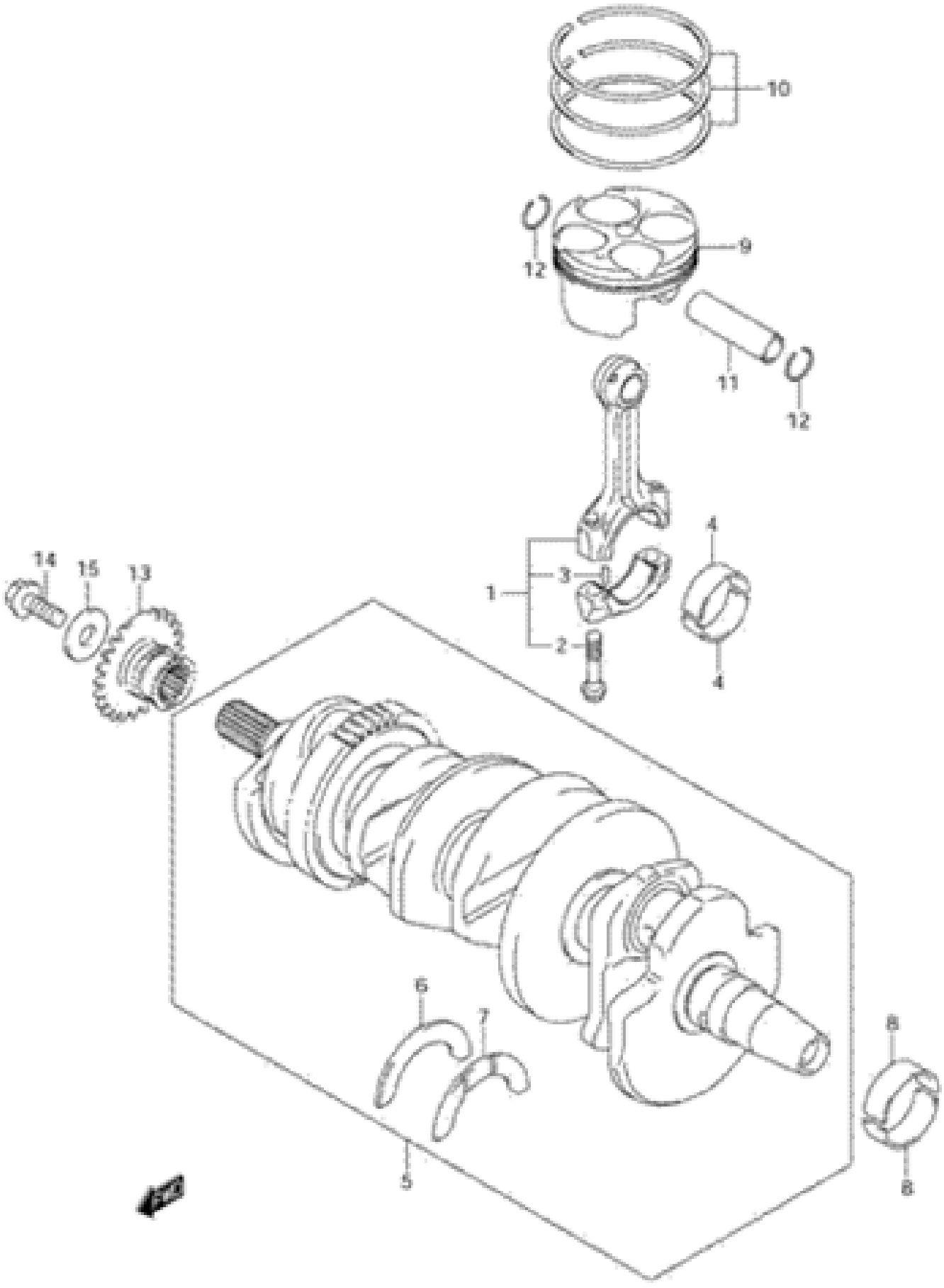

FIG.8

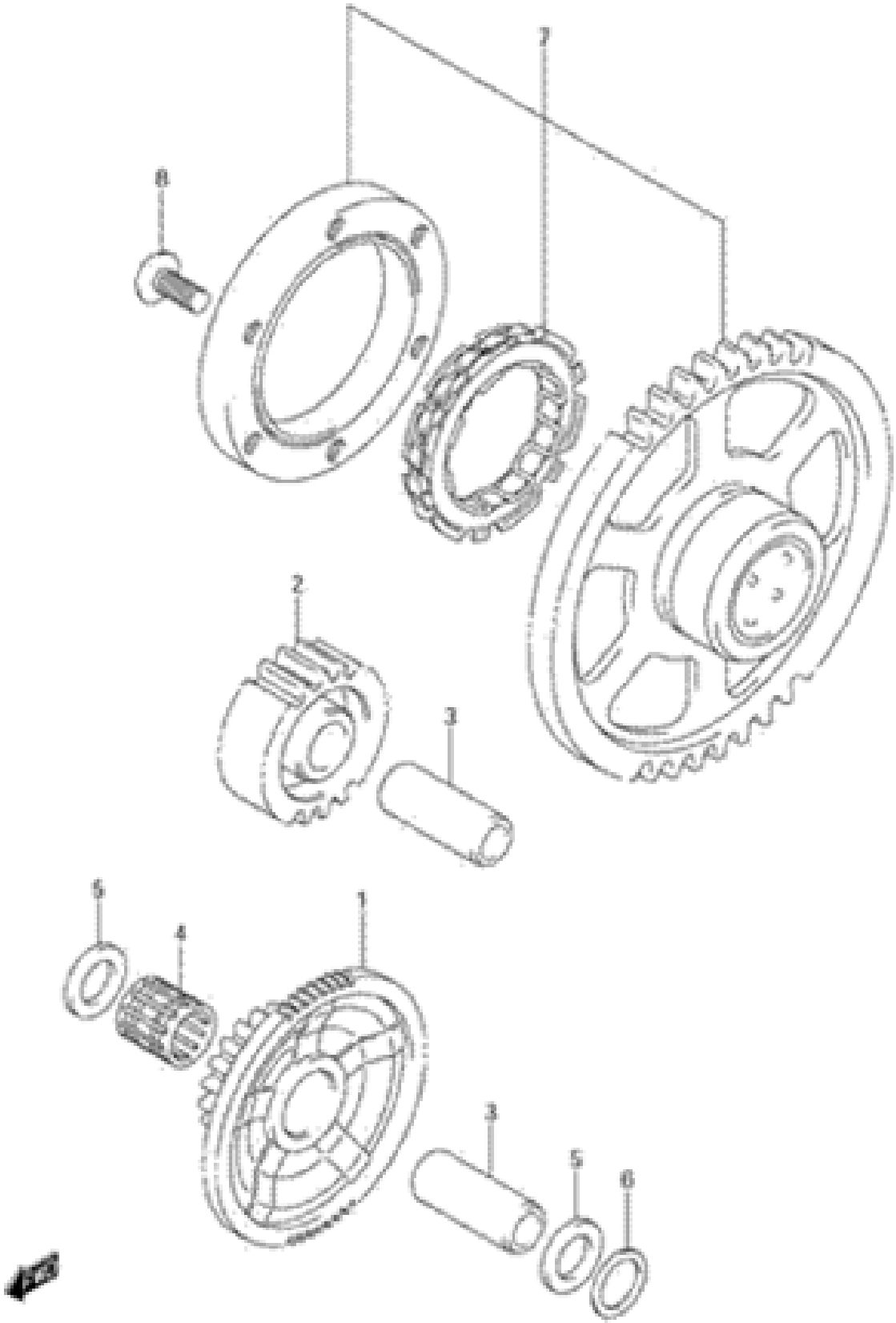

FIG.9

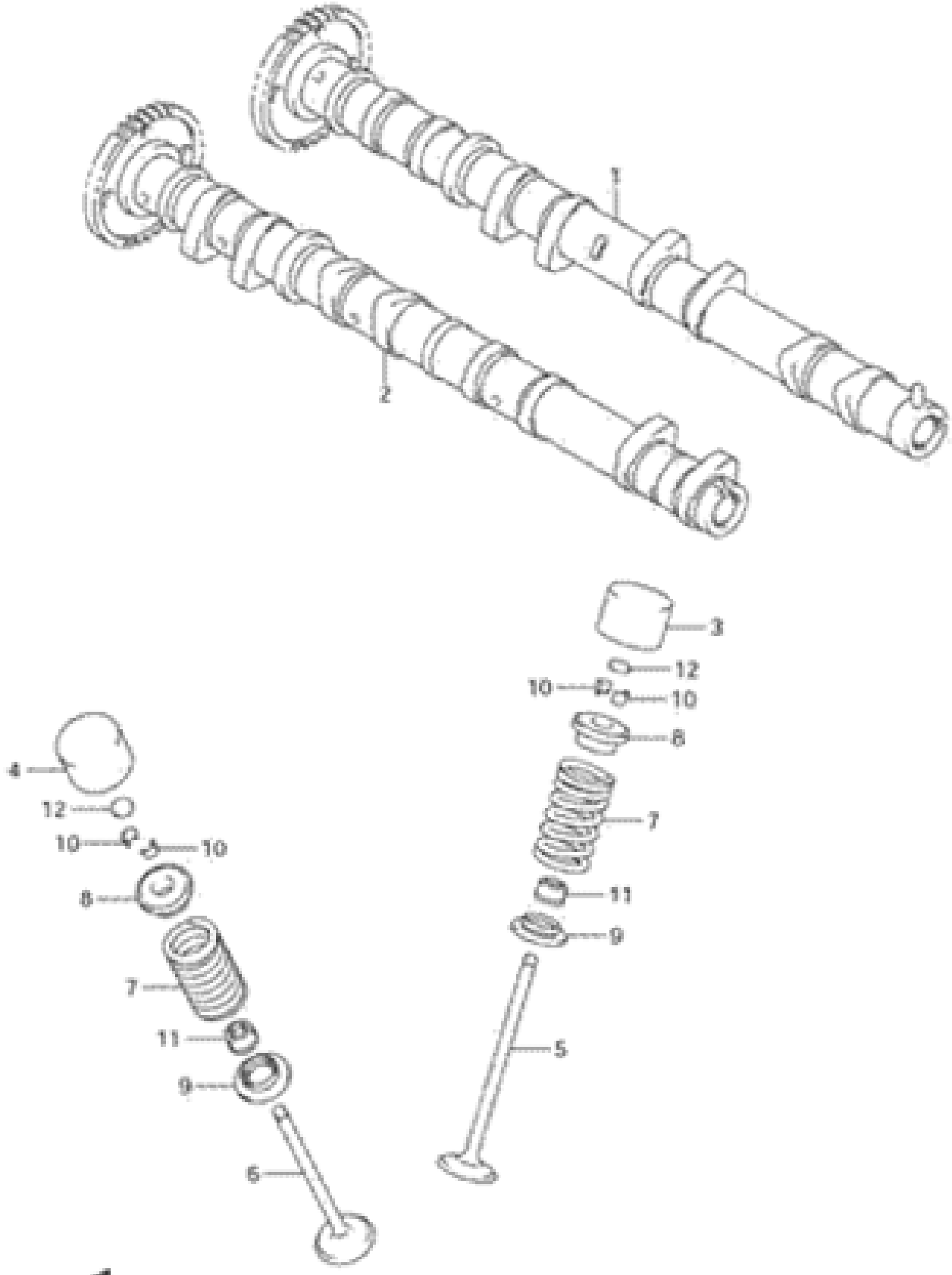

FIG.1

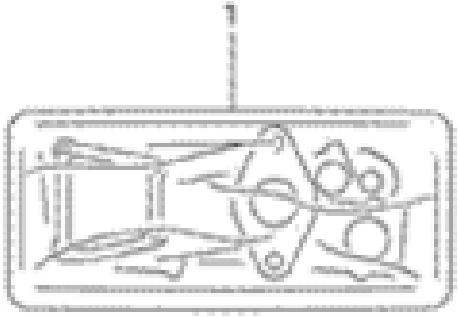

FIG.10

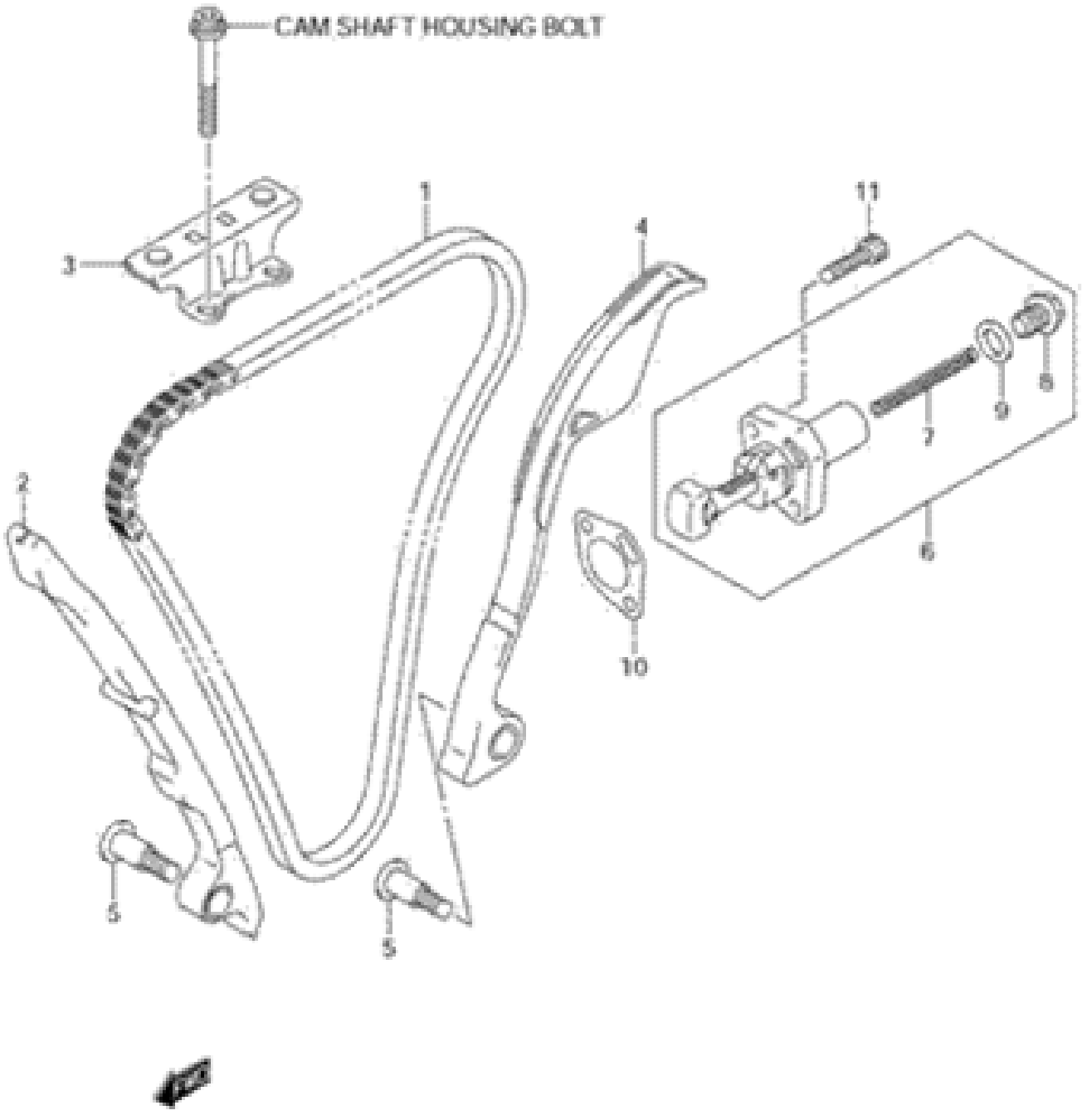

FIG.11

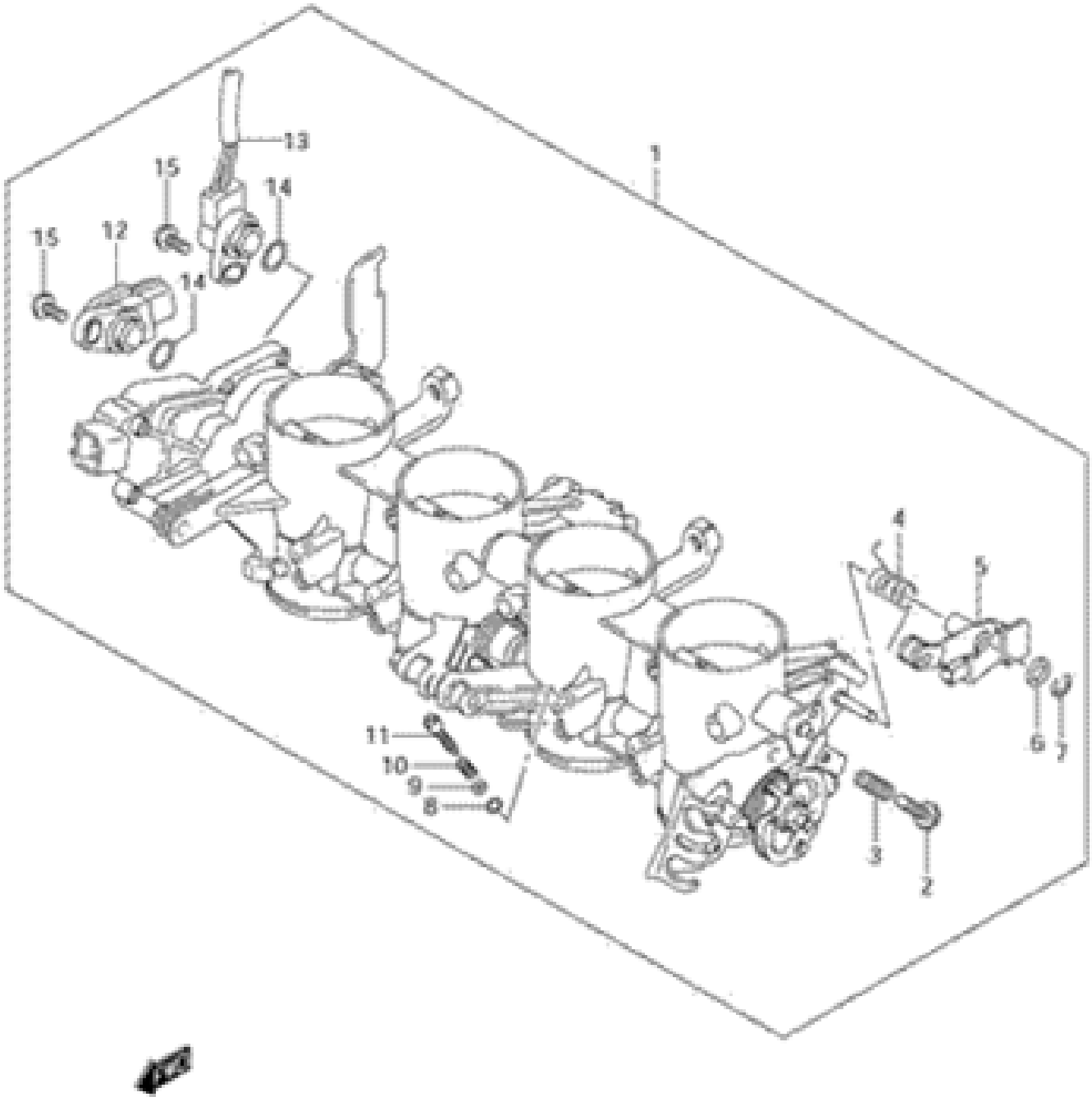

FIG.12

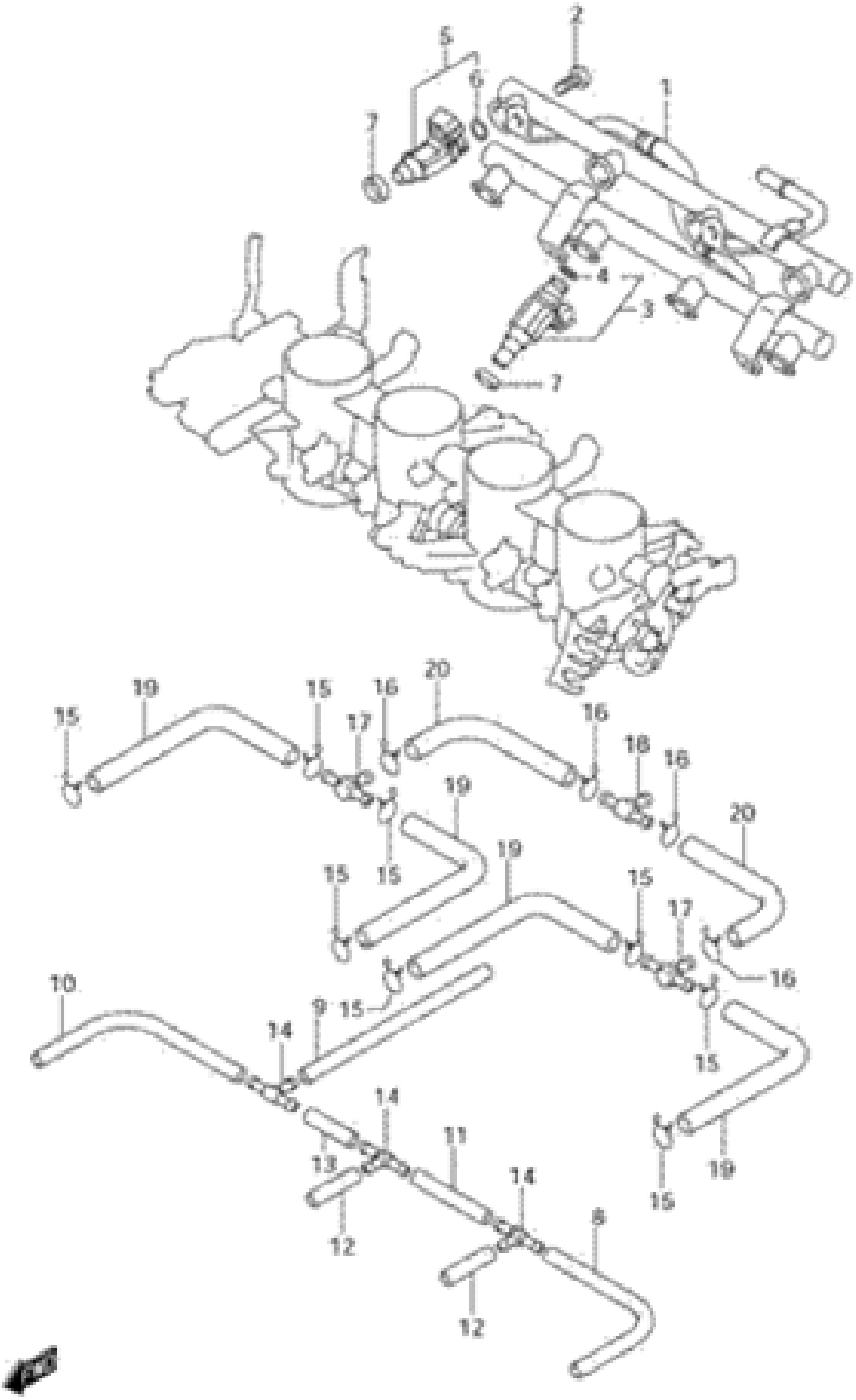

FIG.13

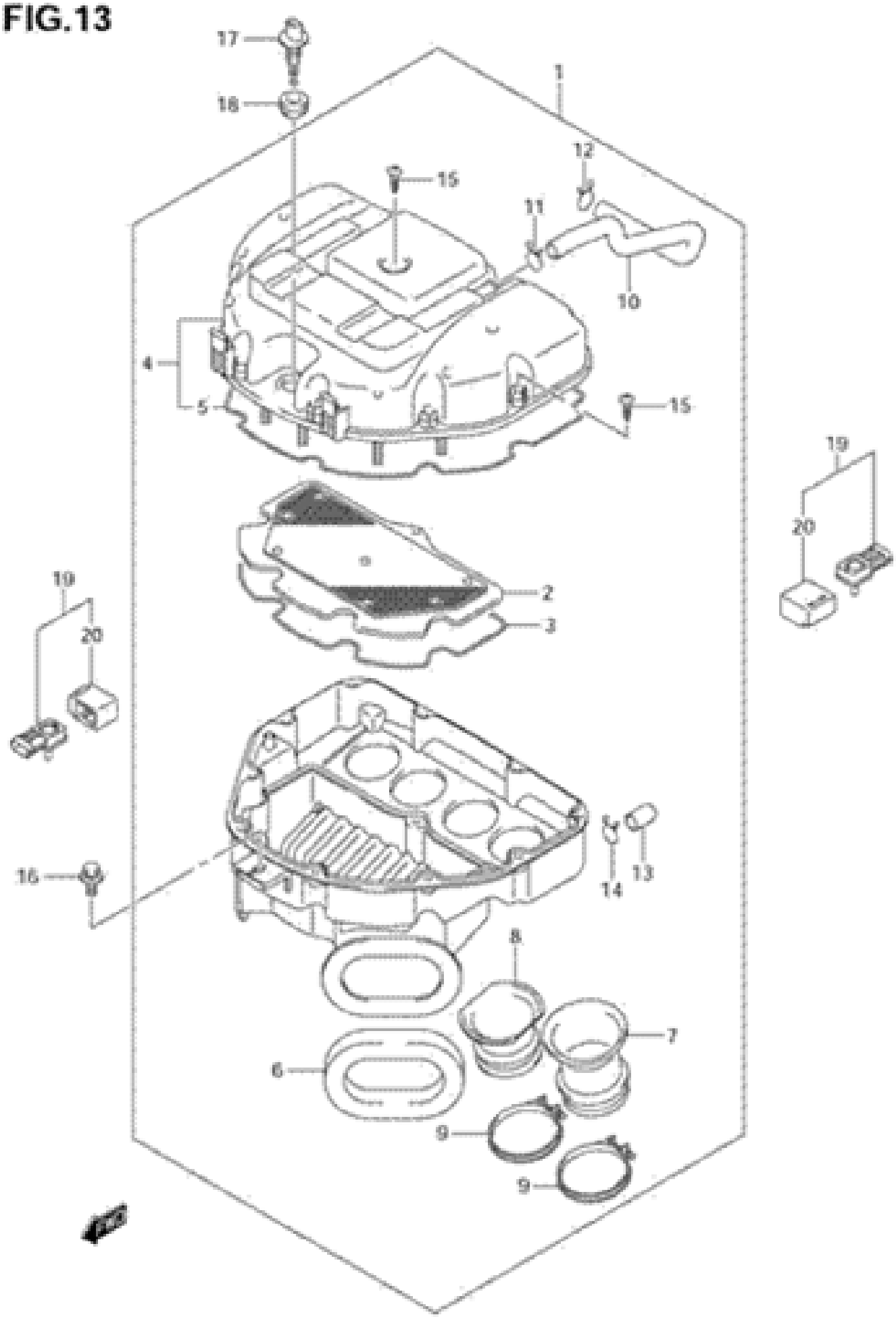

GSX-R600K6 E03 E28_013
AIR CLEANER

FIG.14

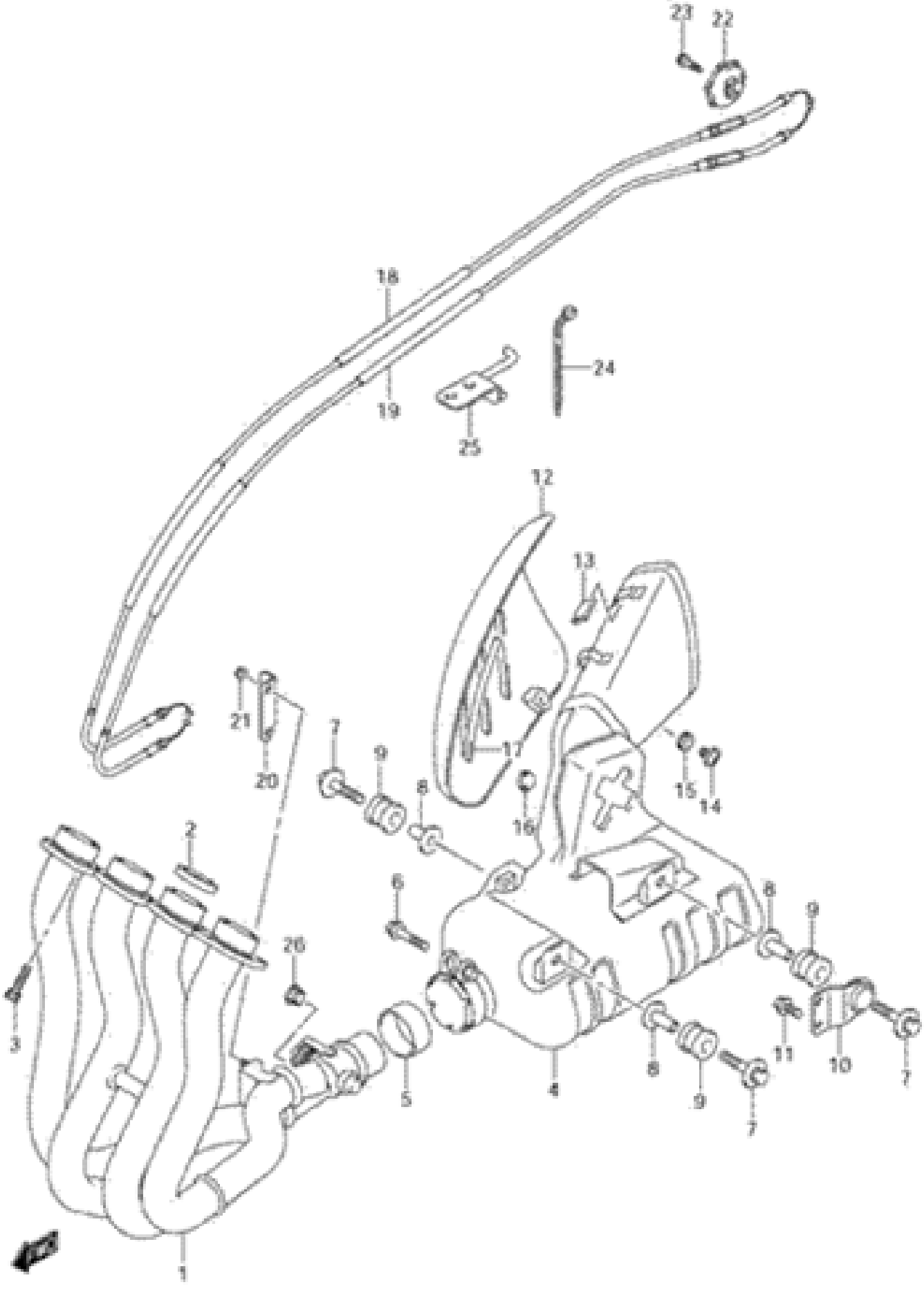

GSX-R600K6 E03 E28_014
MUFFLER

FIG.15

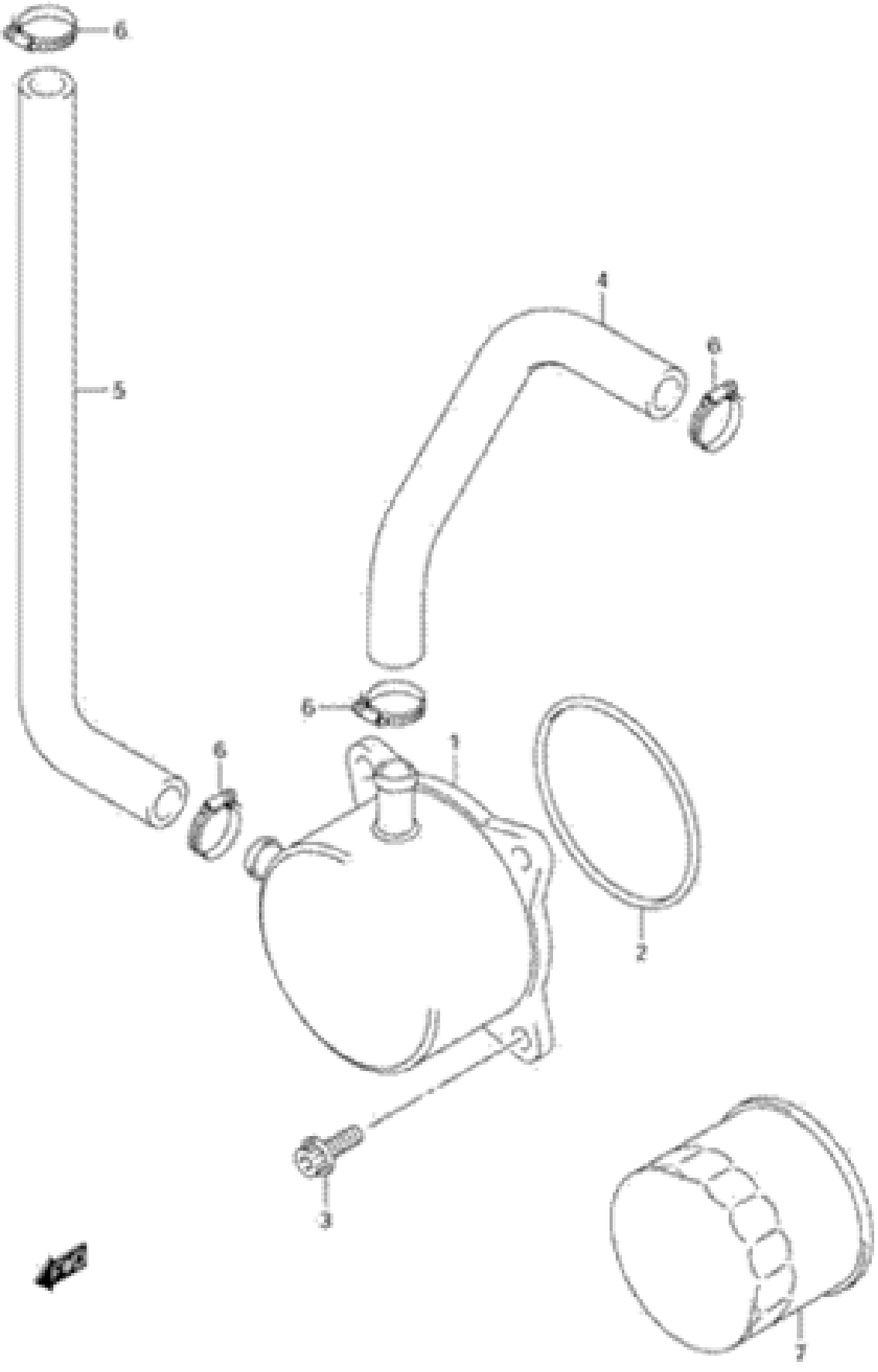

FIG.16

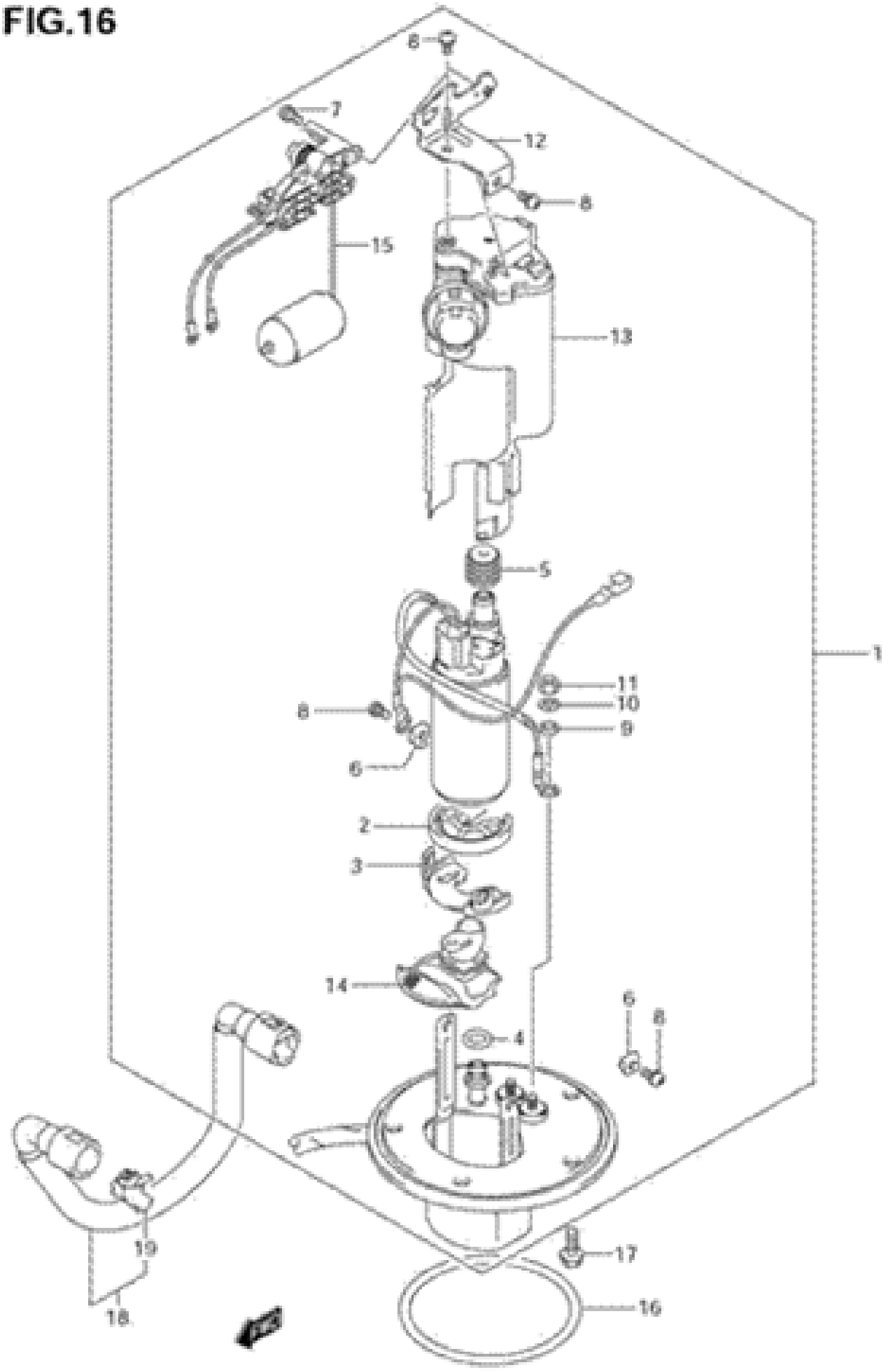

GSX-R600K6 E03 E28_016
FUEL PUMP

FIG.17

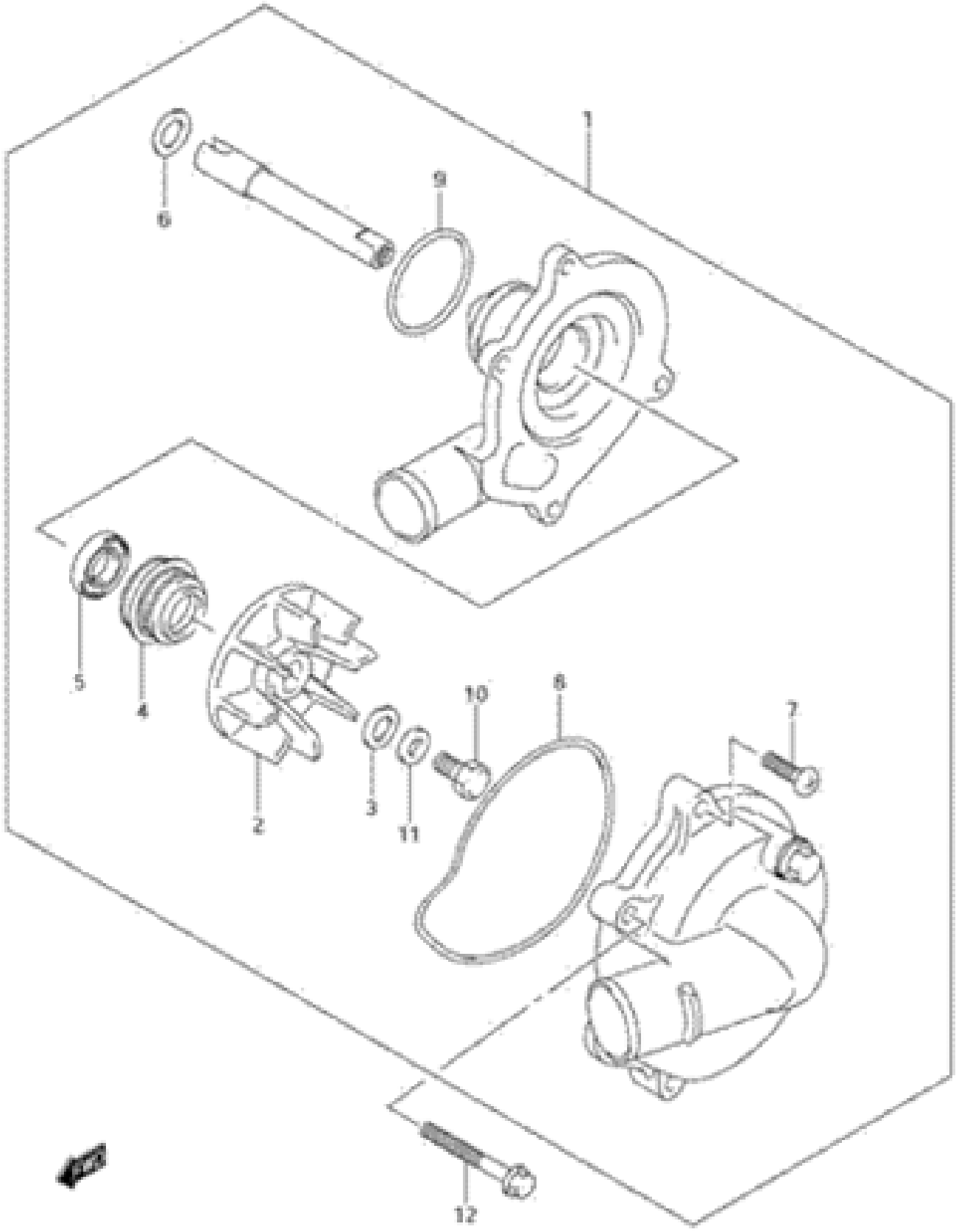

FIG.18

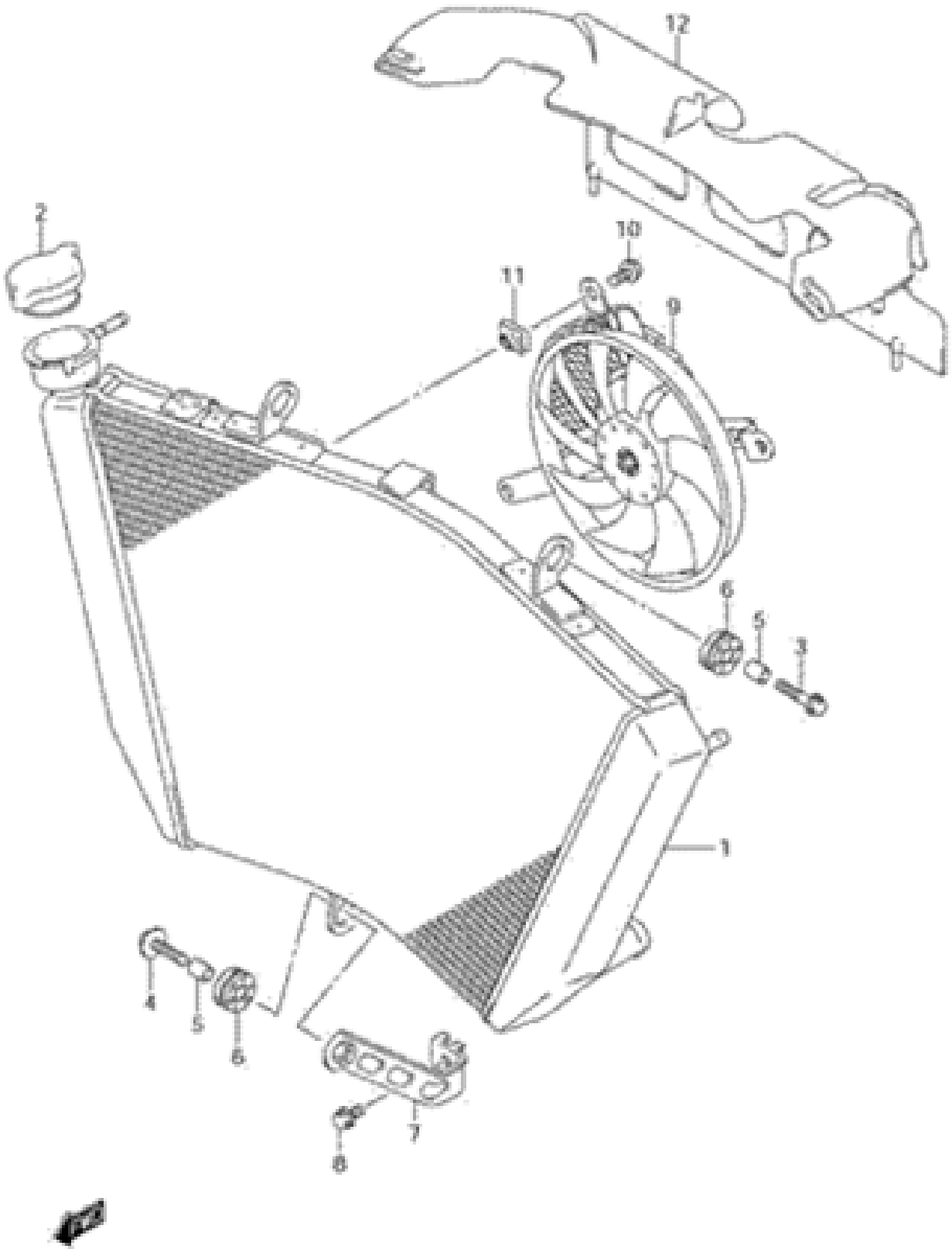

FIG.19

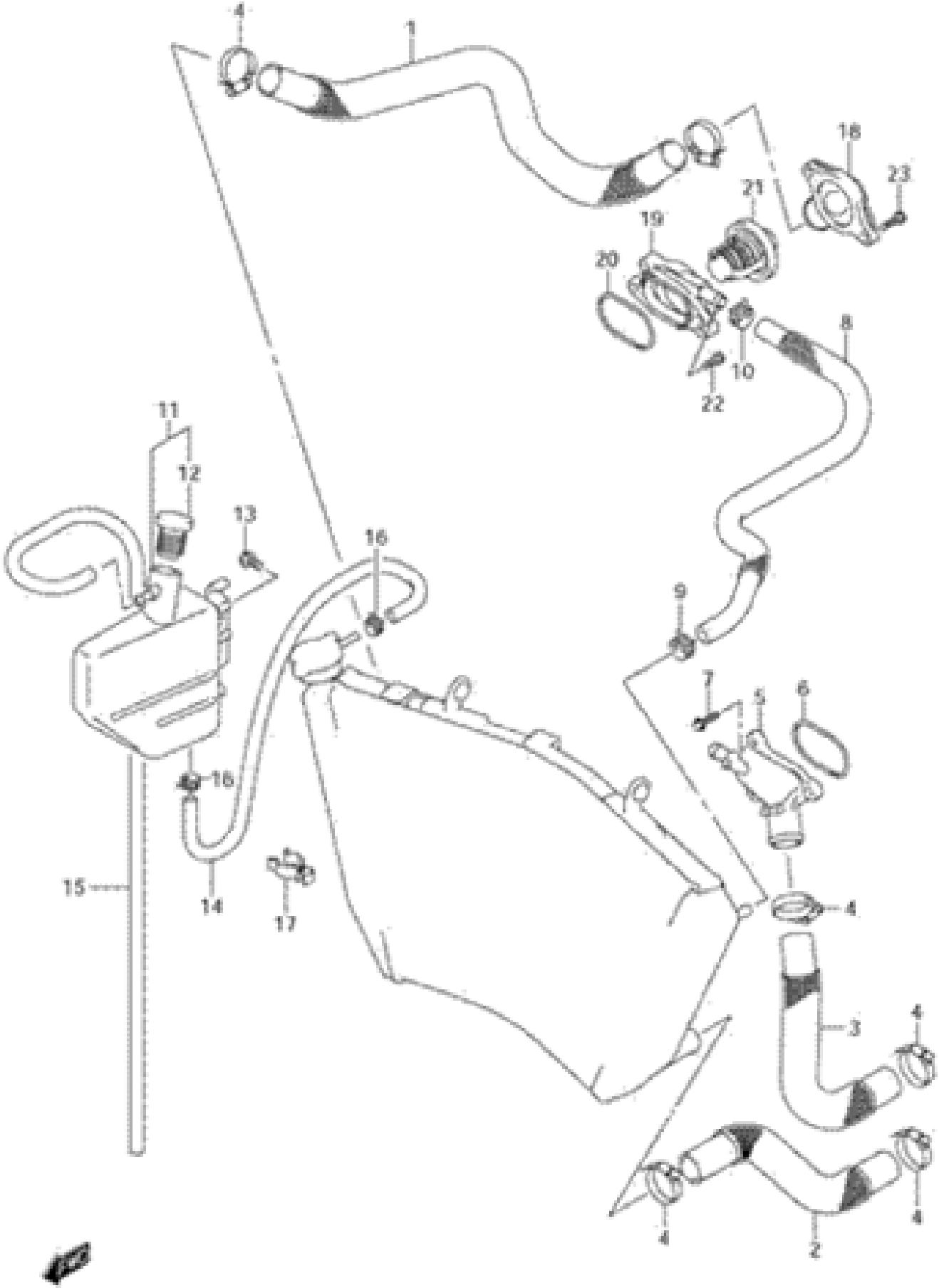

GSX-R600K6 E03 E28_019
RADIATOR HOSE

FIG.2

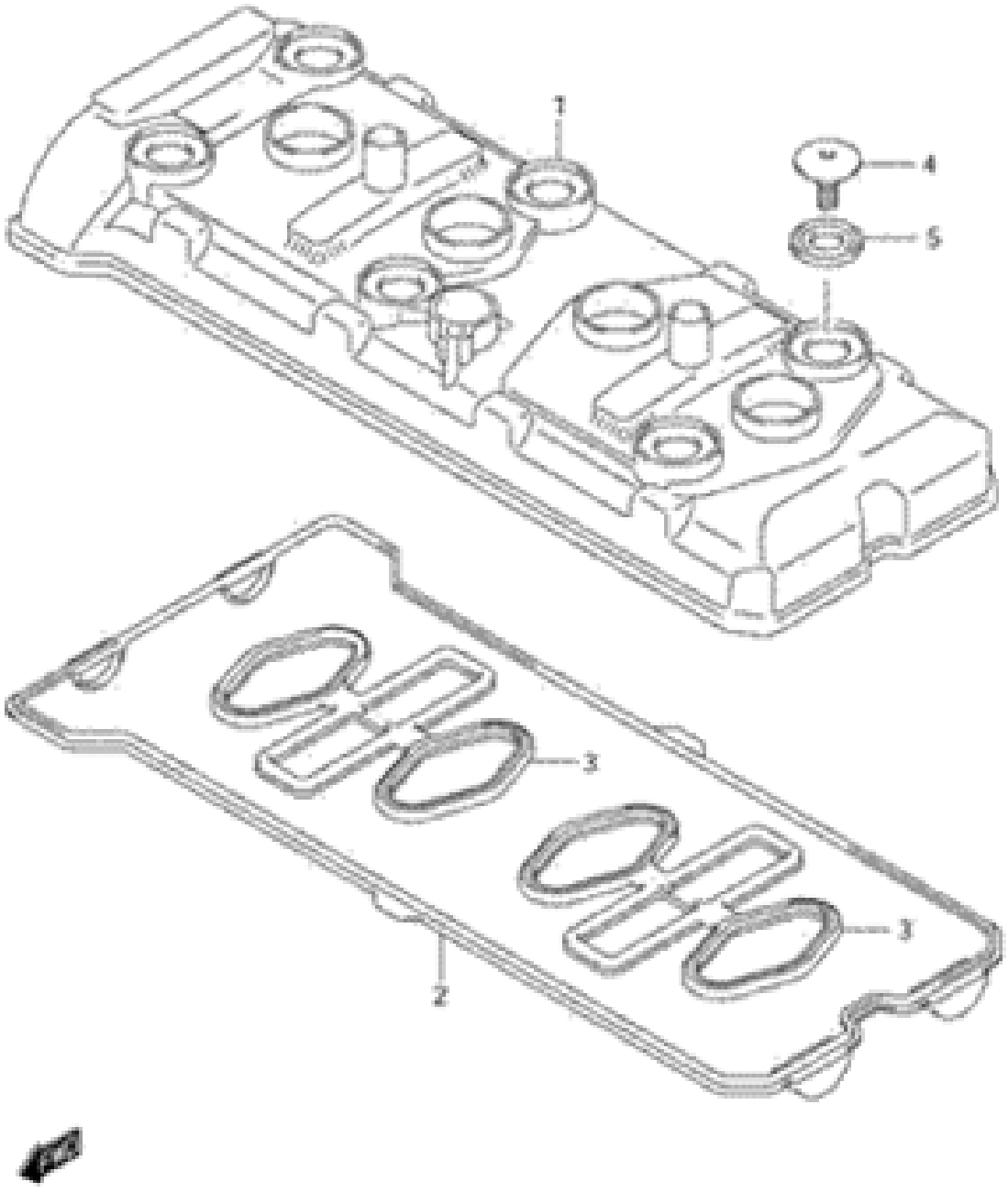

GSX-R600K6 E03 E28_002
CYLINDER HEAD COVER

FIG.20

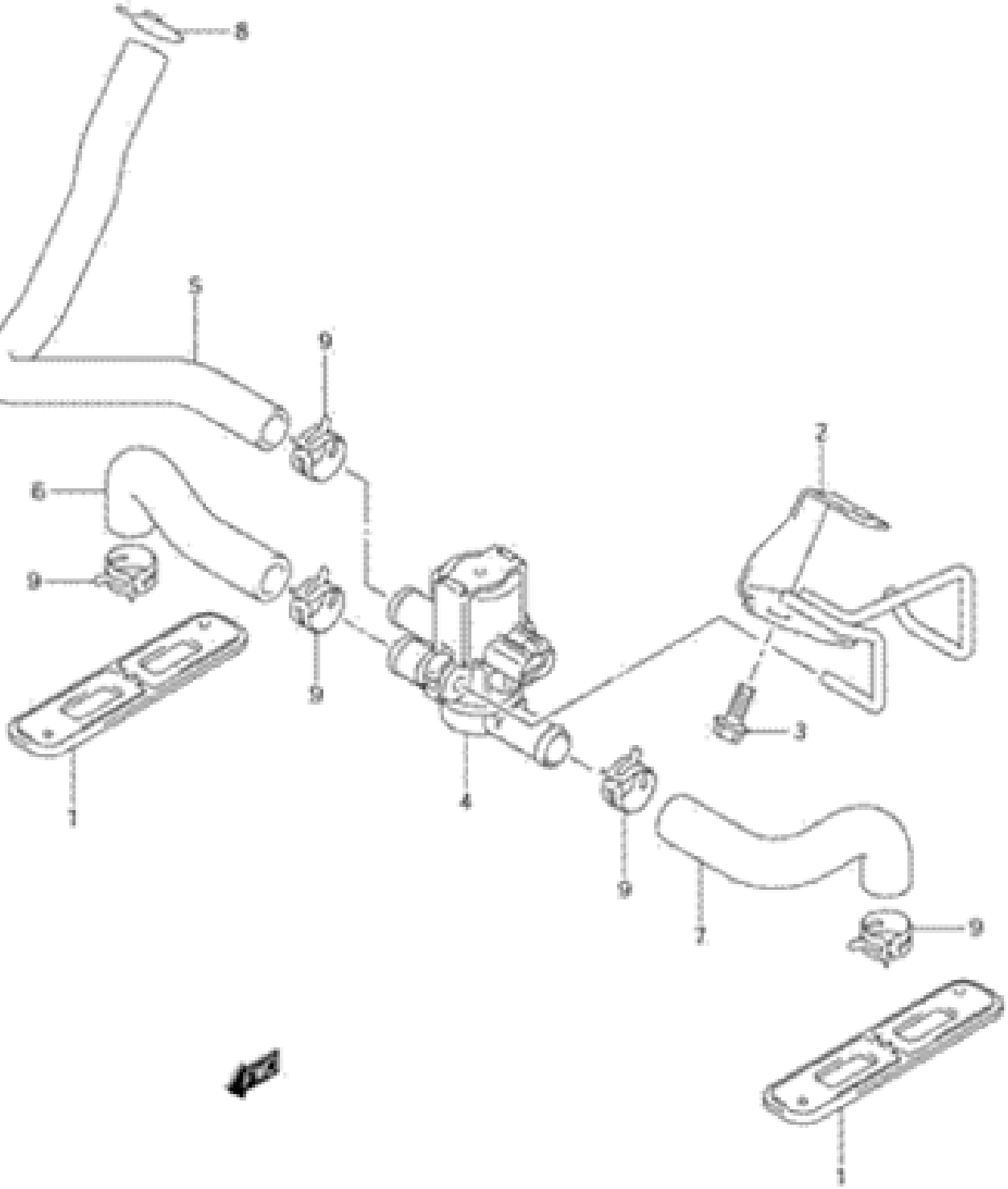

FIG.21

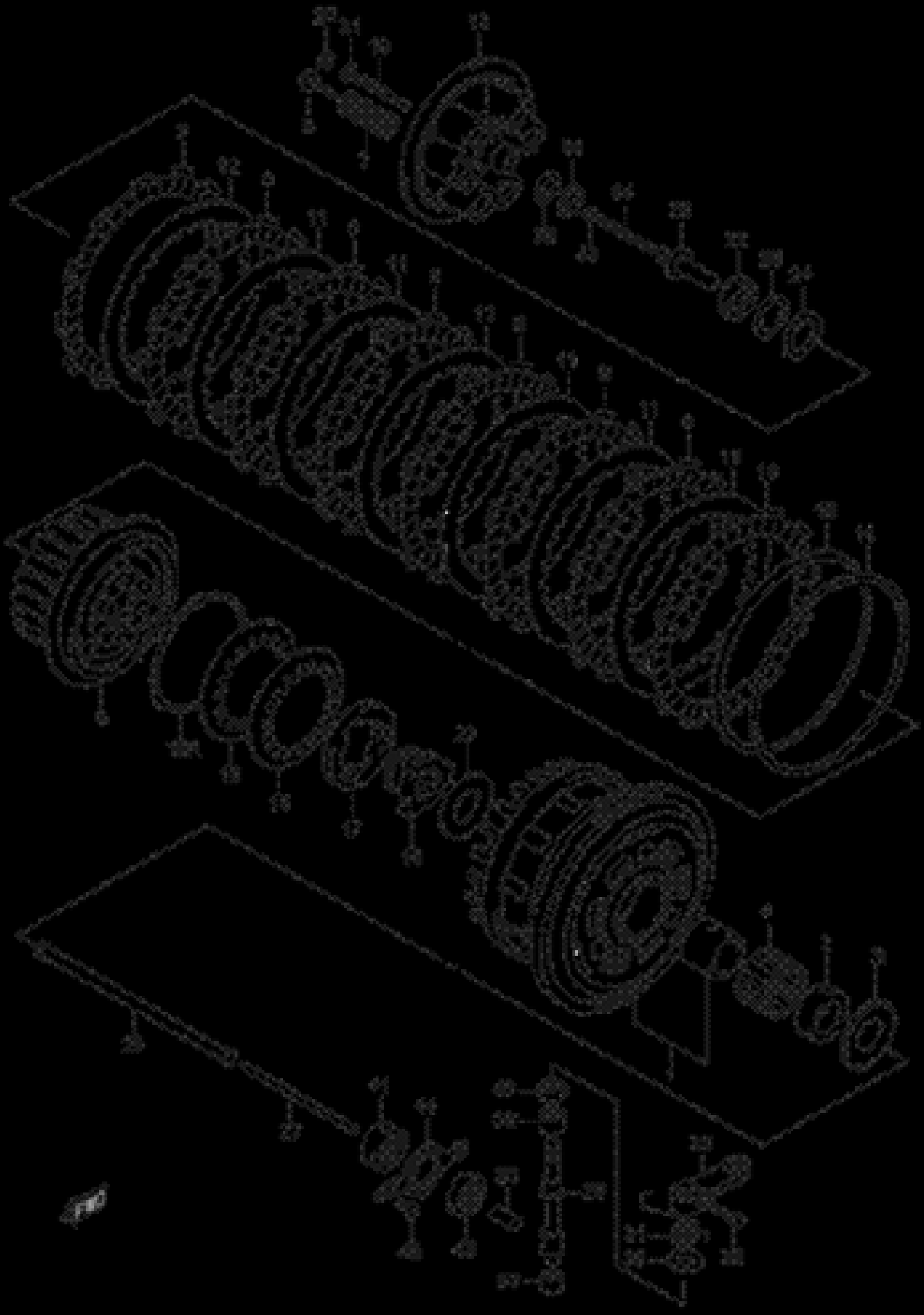

FIG.22

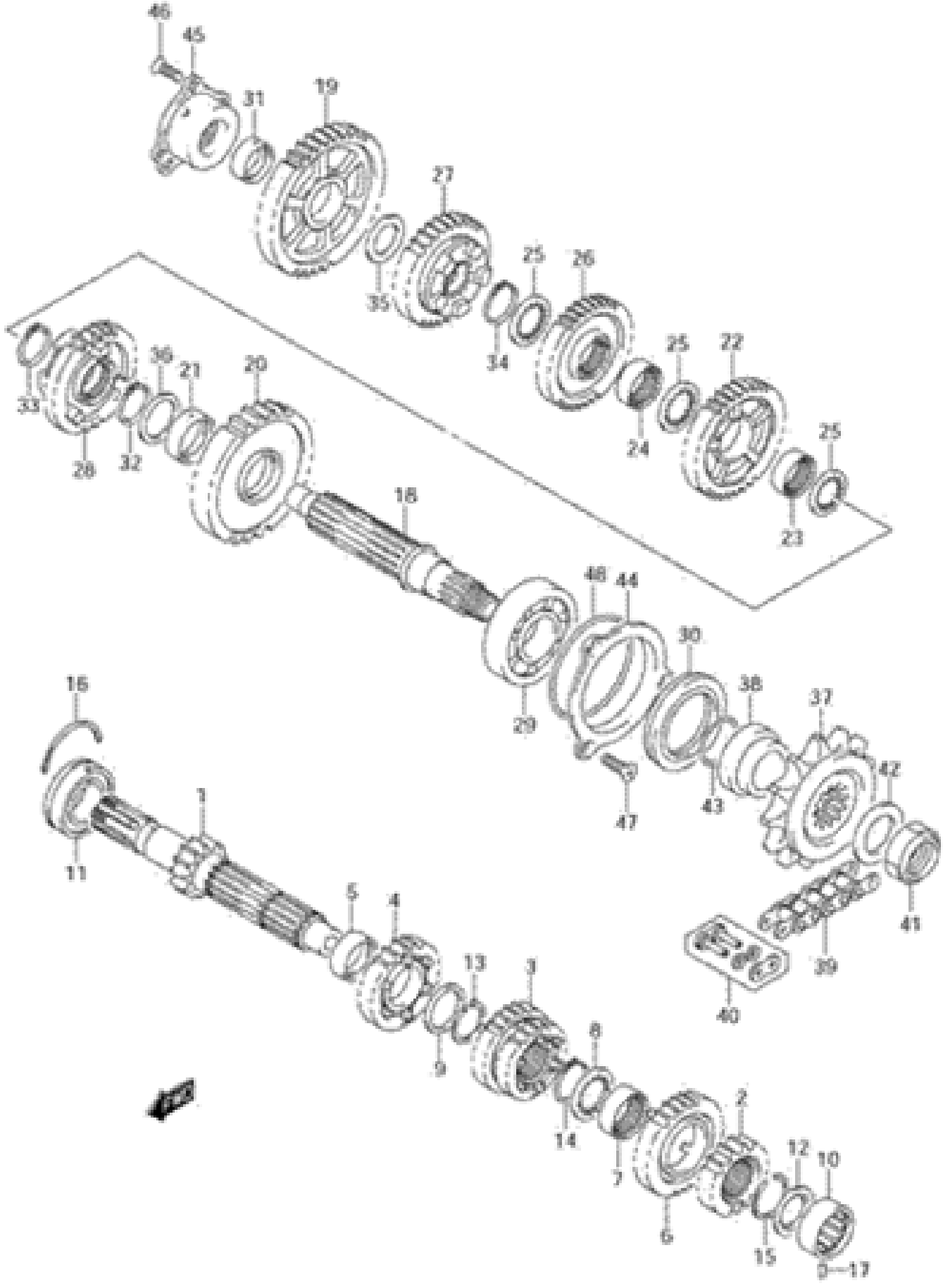
46
45
31
19
27
35
34
25
26
24
25
22
25
23
33
28
36
32
21
20
18
48
44
30
29
47
38
43
37
42
41
39
40
16
11
1
5
4
13
3
9
8
14
7
2
6
12
10
15
17

FIG.23

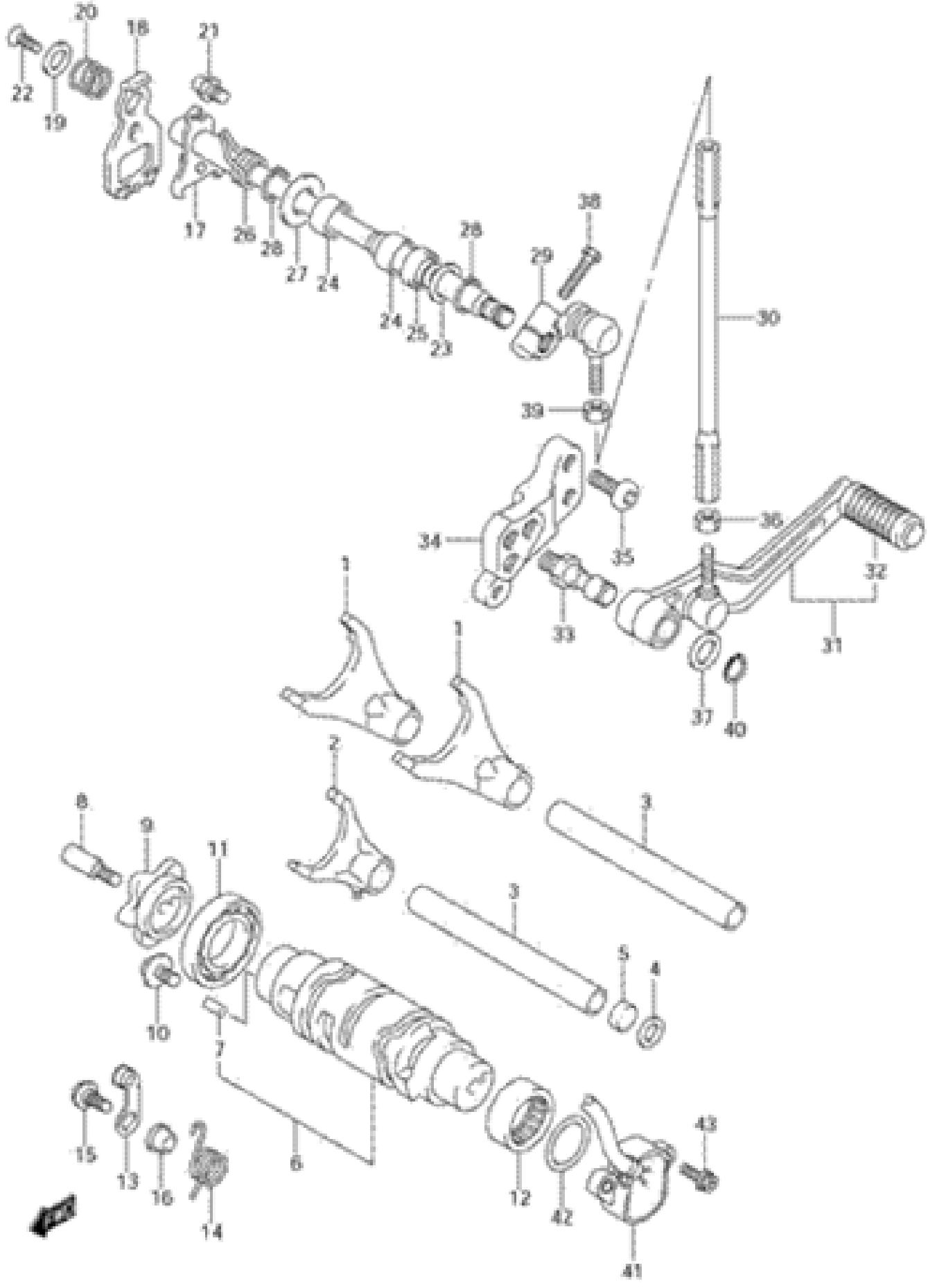
20
18
21
22
19
17
26
28
27
24
24
25
23
28
29
38
30
39
34
35
36
32
33
31
37
40
1
1
2
3
8
9
11
3
5
4
10
7
15
13
16
14
6
12
42
43
41
FRONT

FIG.24

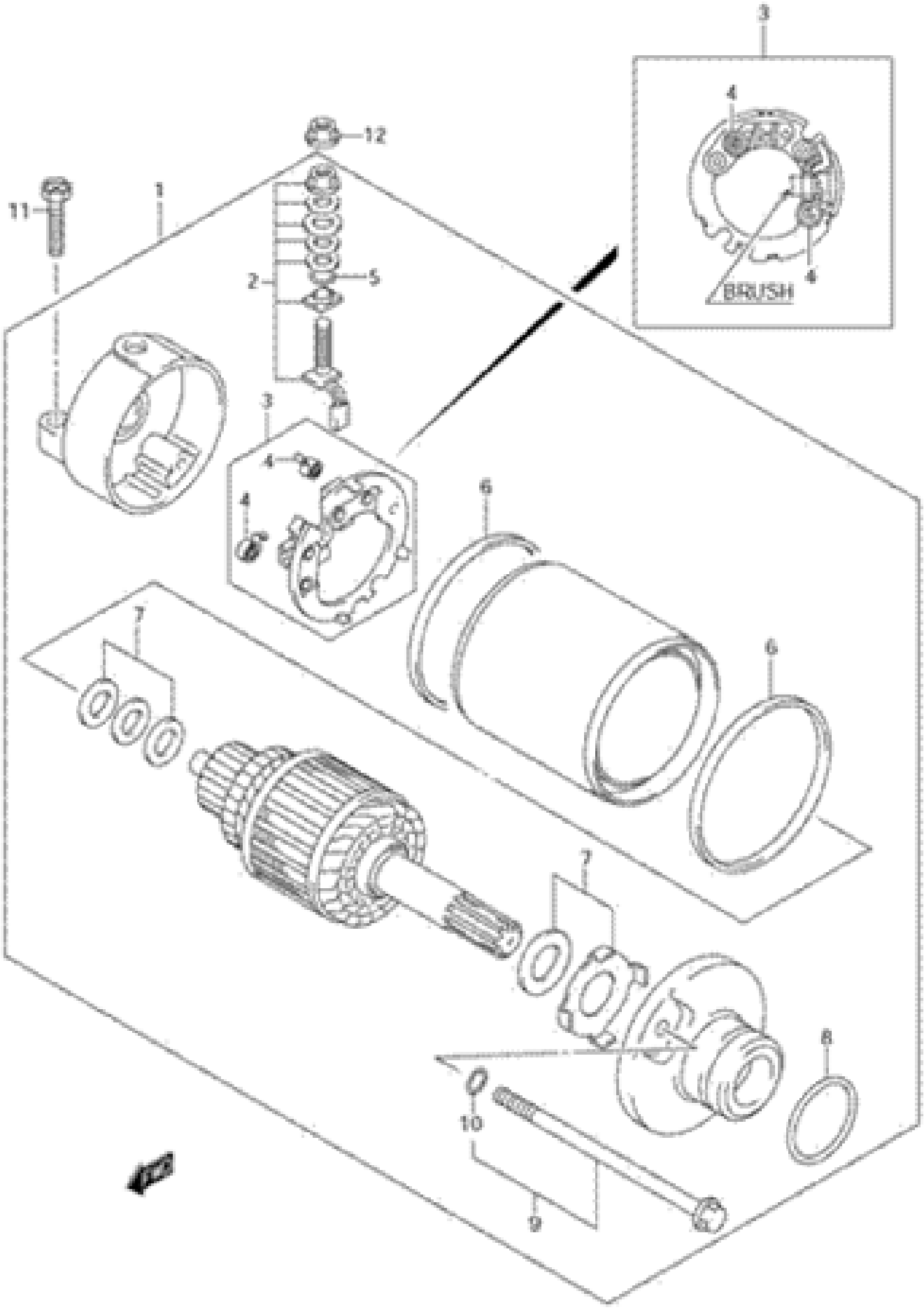

GSX-R600K6 E03 E28_024
STARTING MOTOR

FIG.25

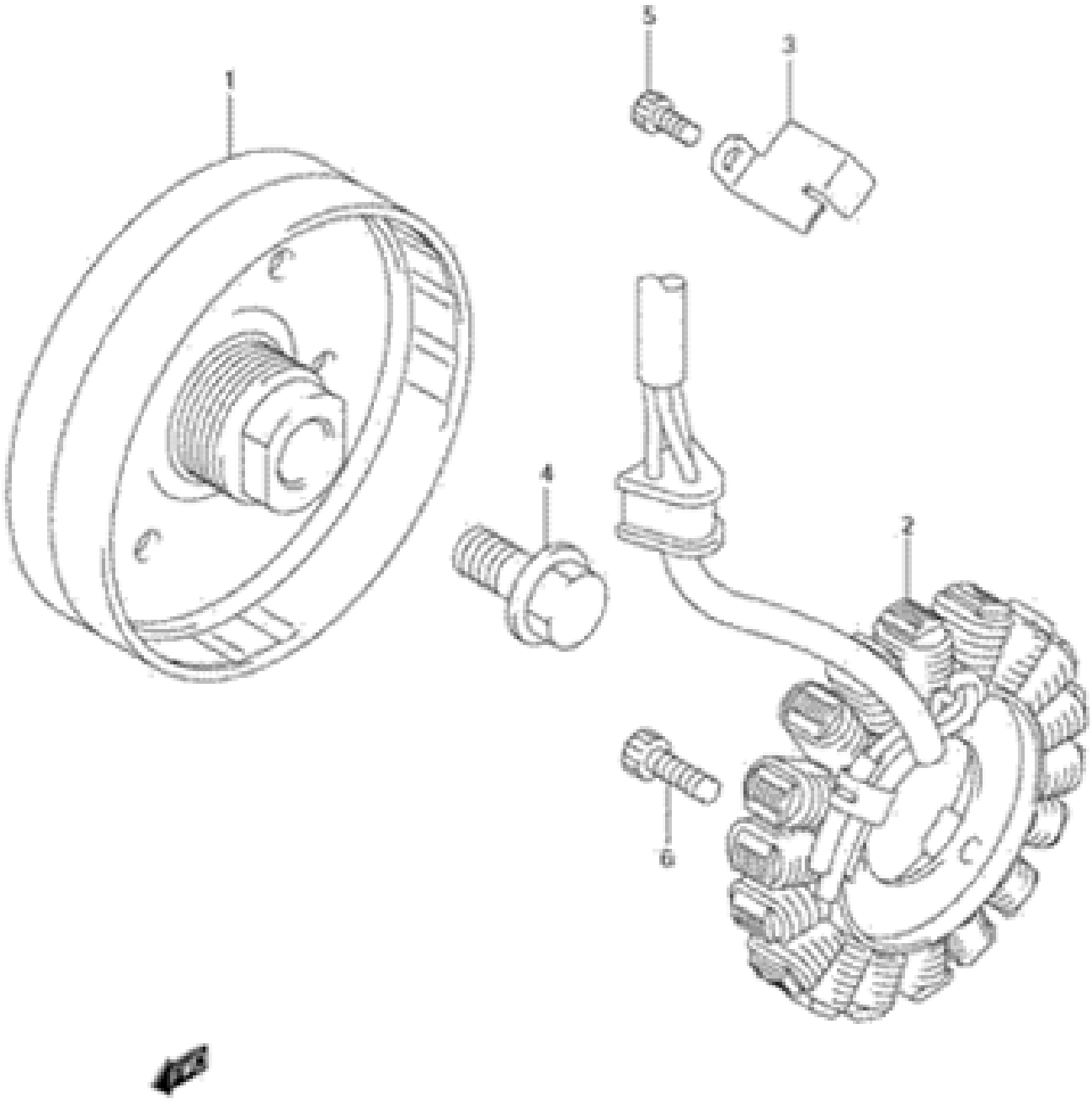

FIG.26

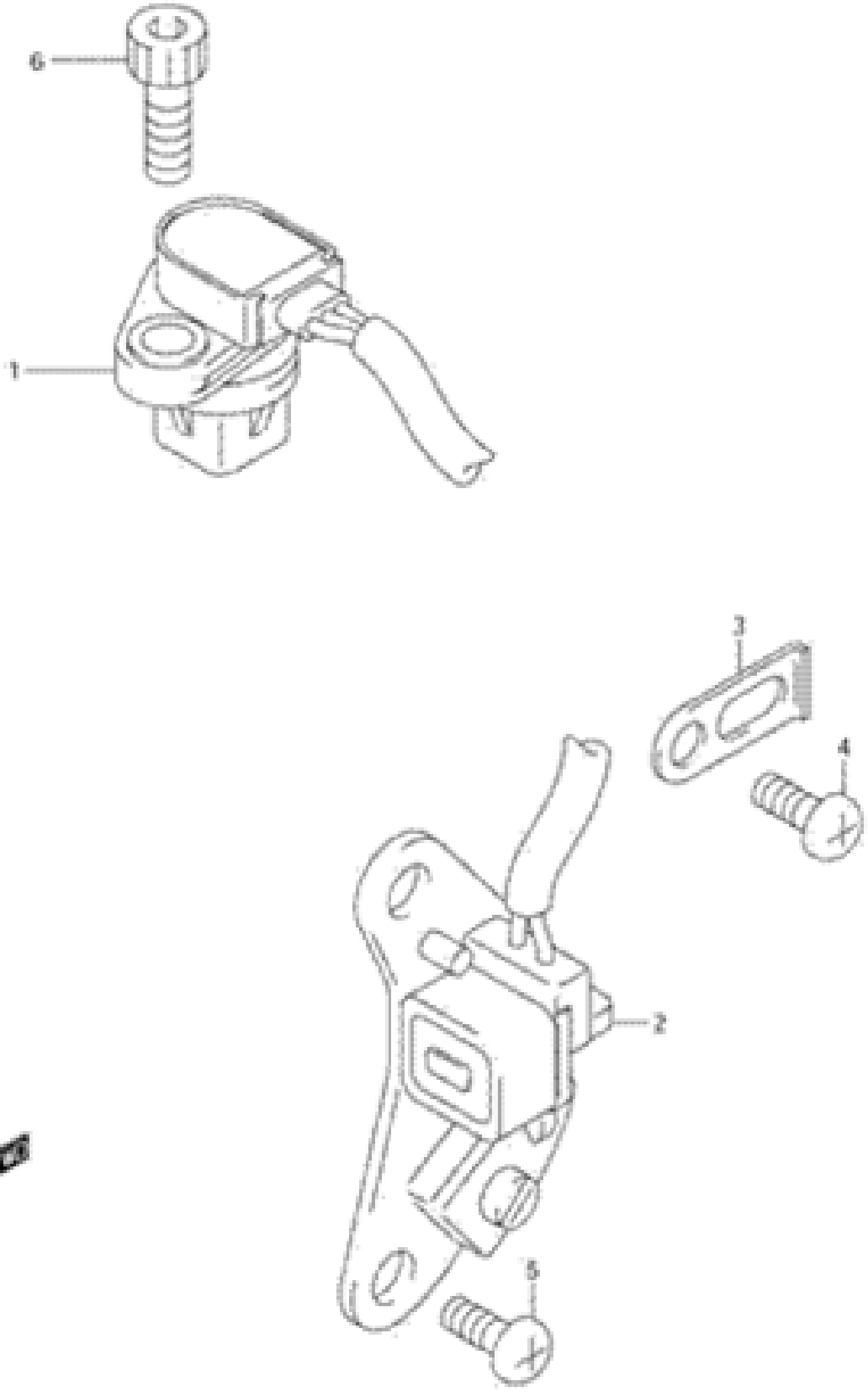

FIG.27

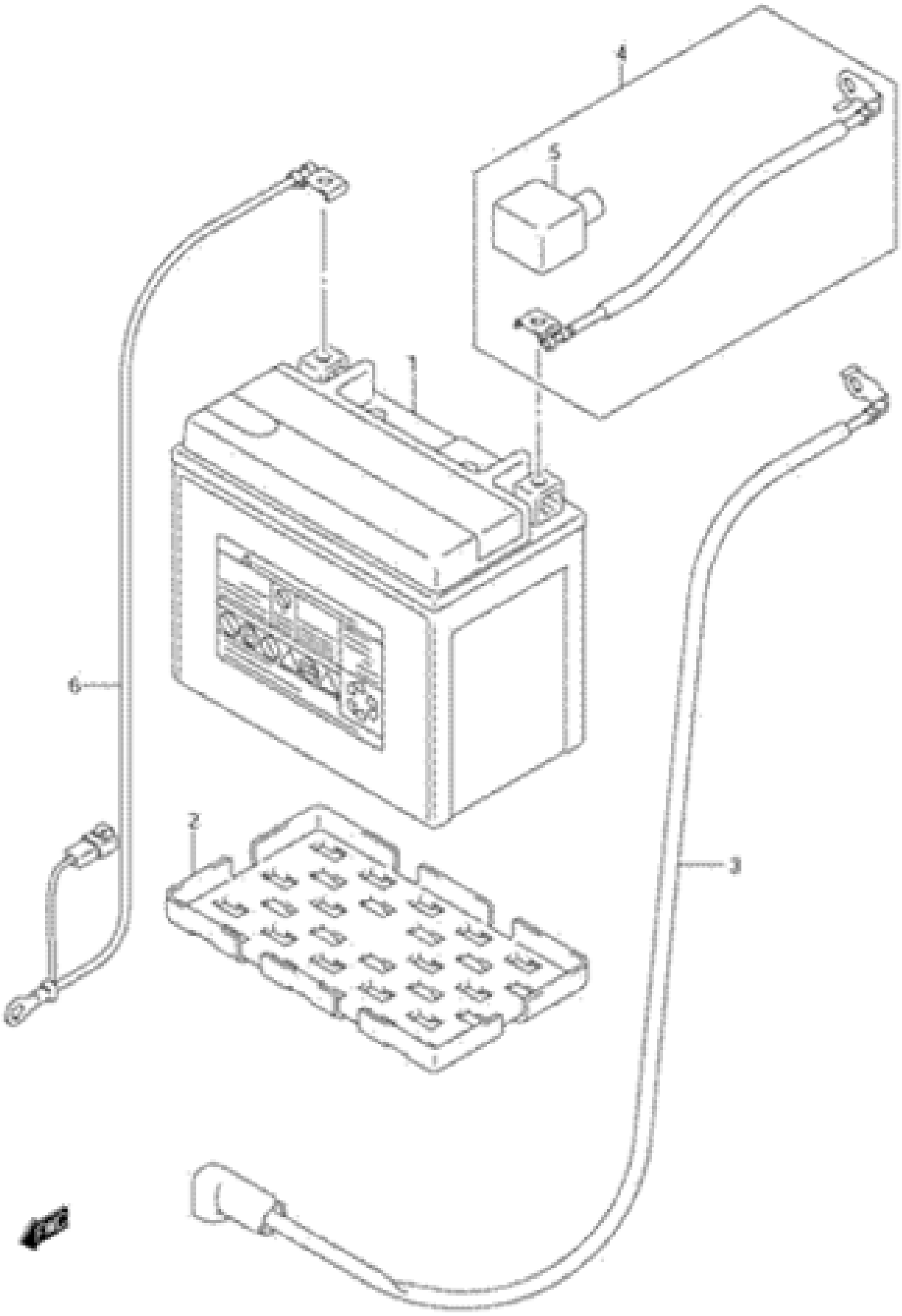

FIG.28

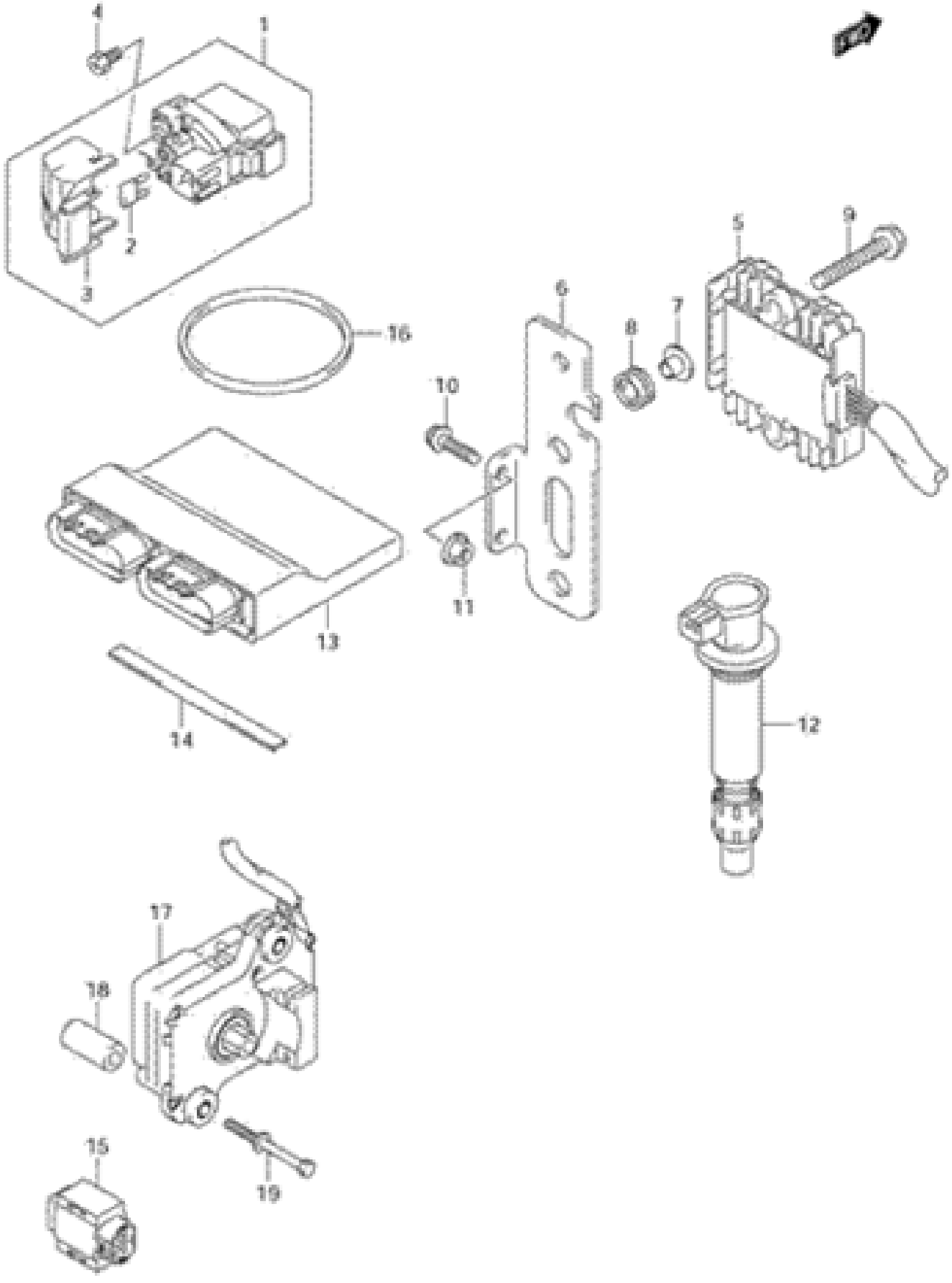

FIG.29

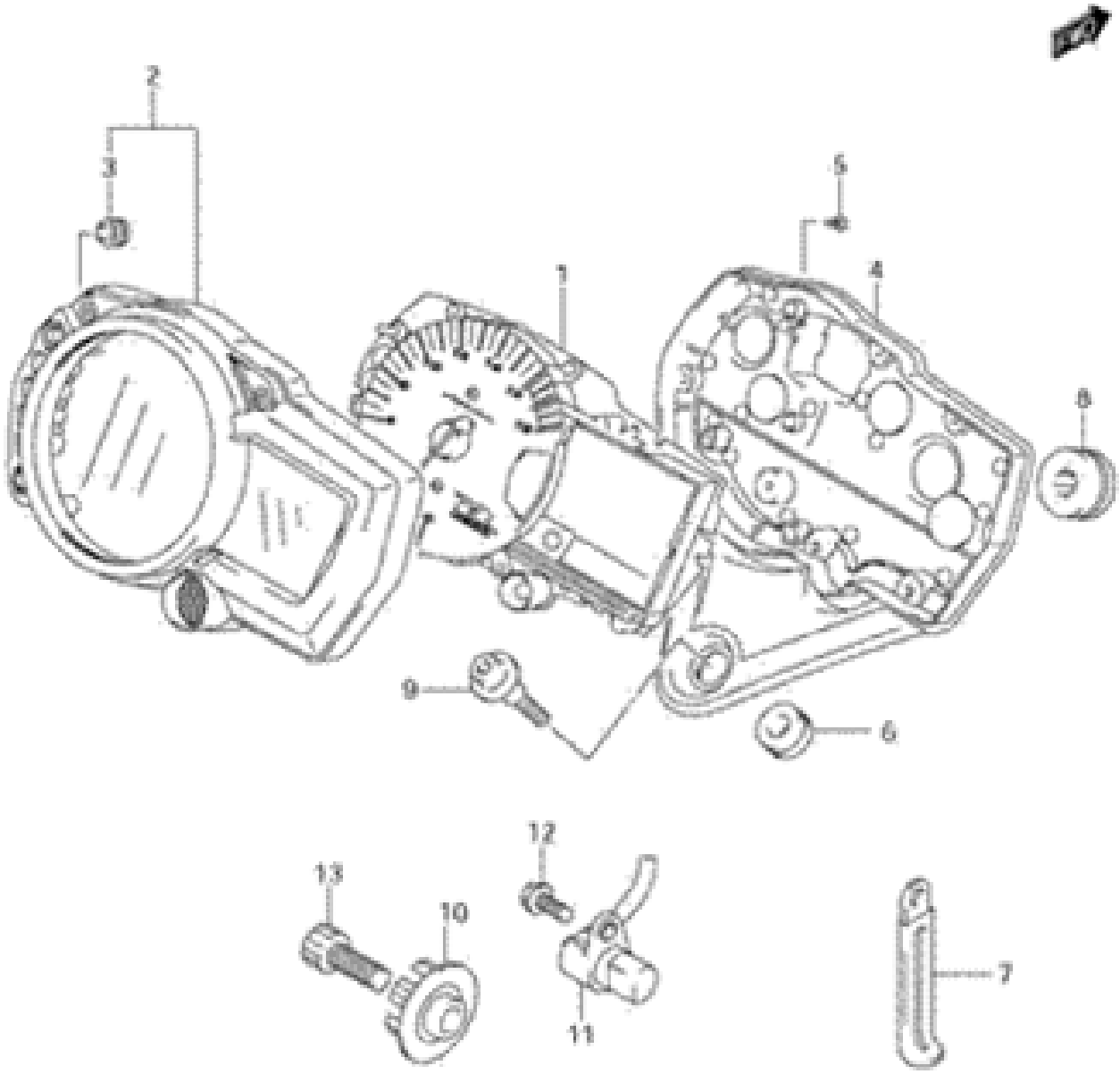

FIG.3

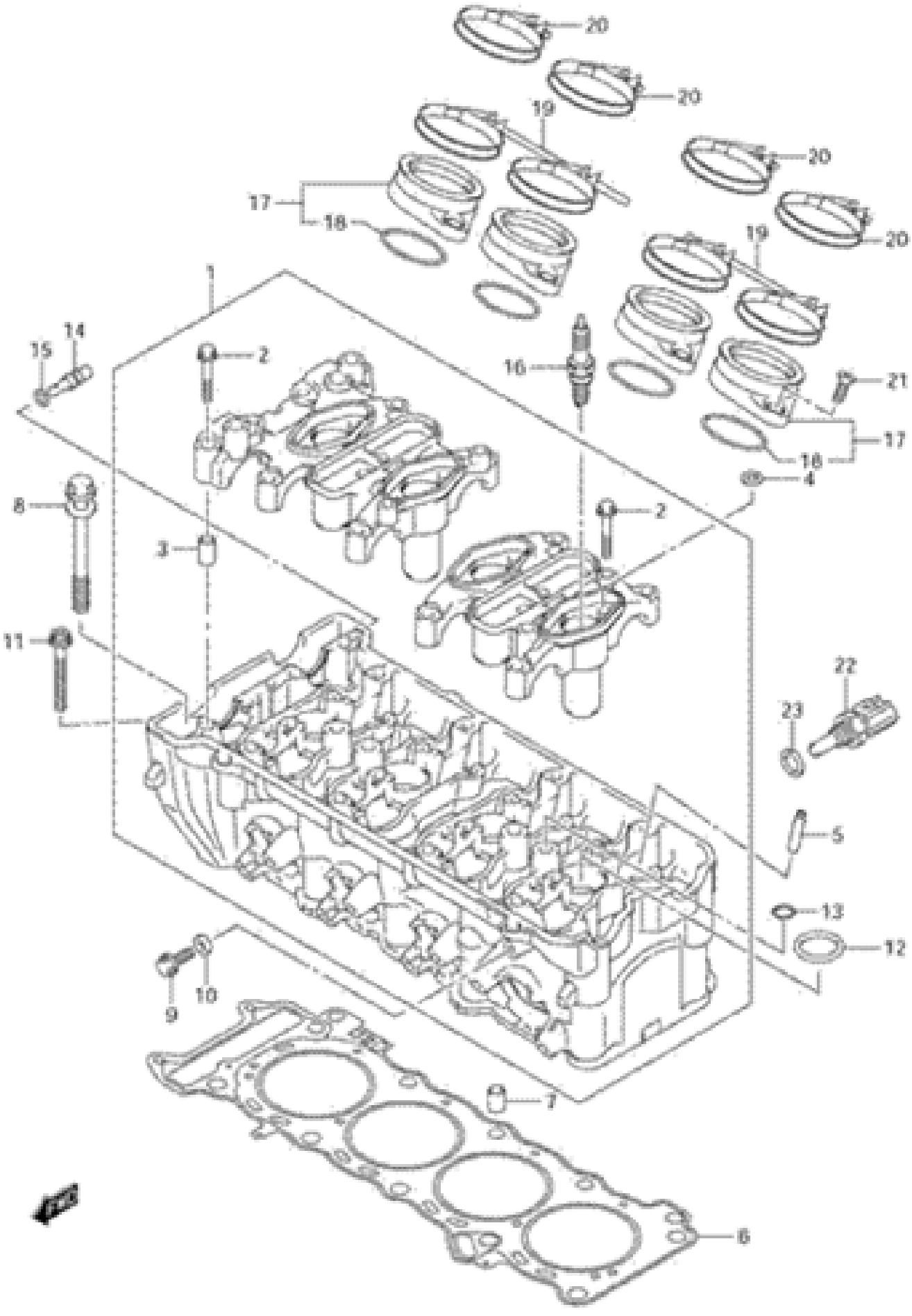

FIG.30

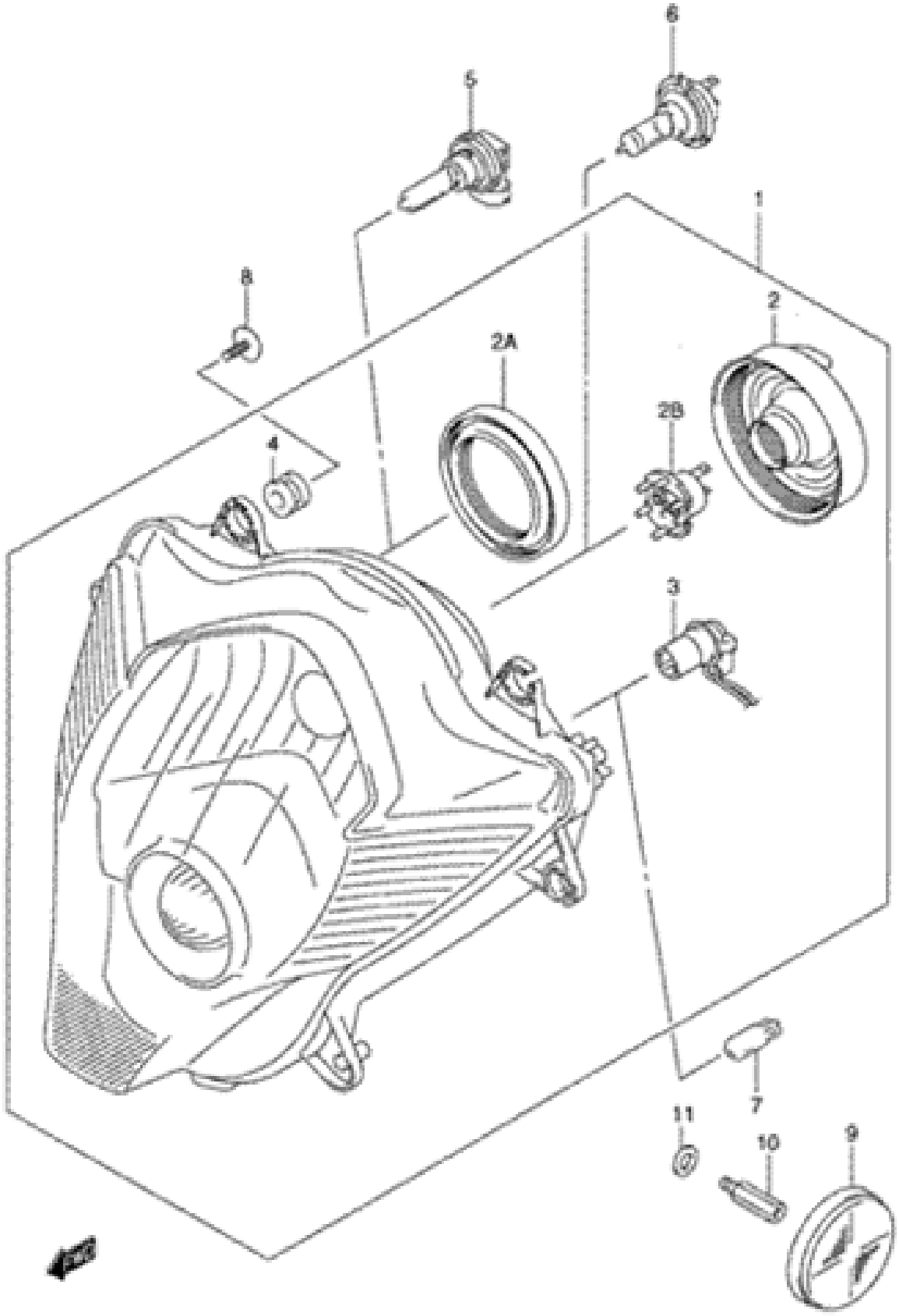

GSX-R600K8 E03 E28_030
HEAD LAMP-C

FIG.22

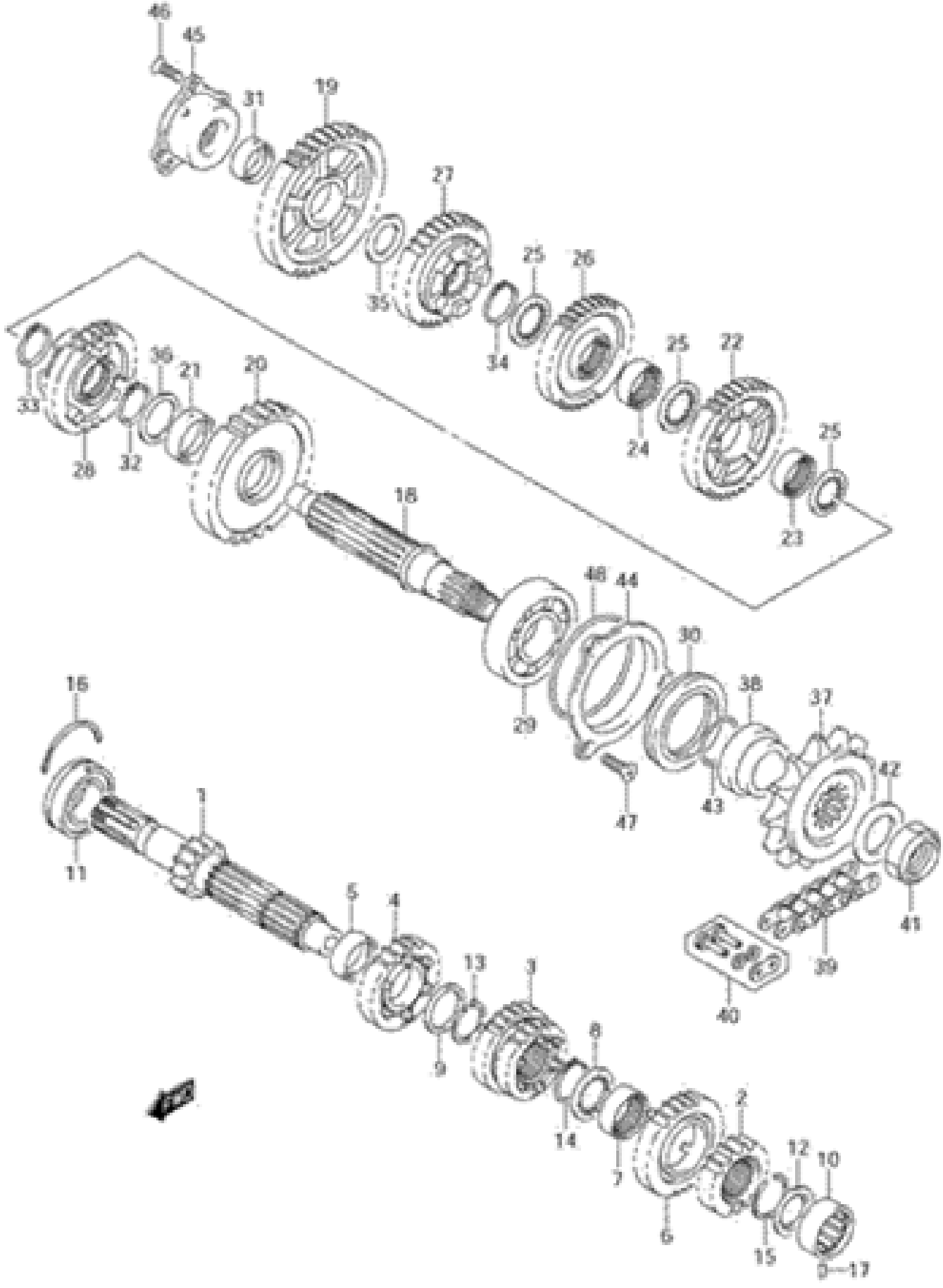
46
45
31
19
27
35
34
25
26
24
25
22
25
23
33
28
36
32
21
20
18
48
44
30
29
47
38
43
37
42
41
39
40
16
11
1
5
4
13
3
9
8
14
7
2
6
12
10
15
17

FIG.32

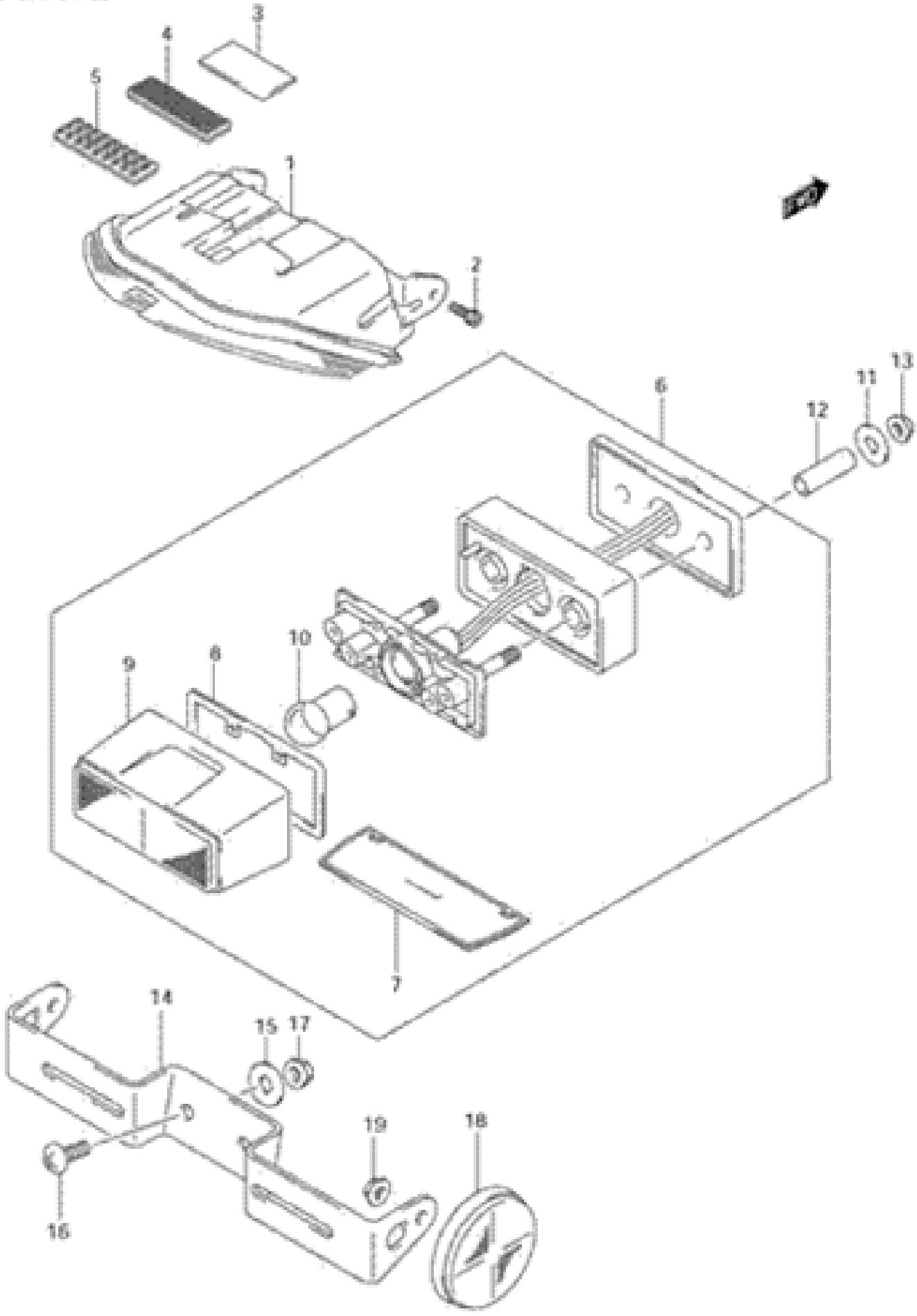

GSX-R600K6 E03 E28_032
TAIL LAMP

FIG.33

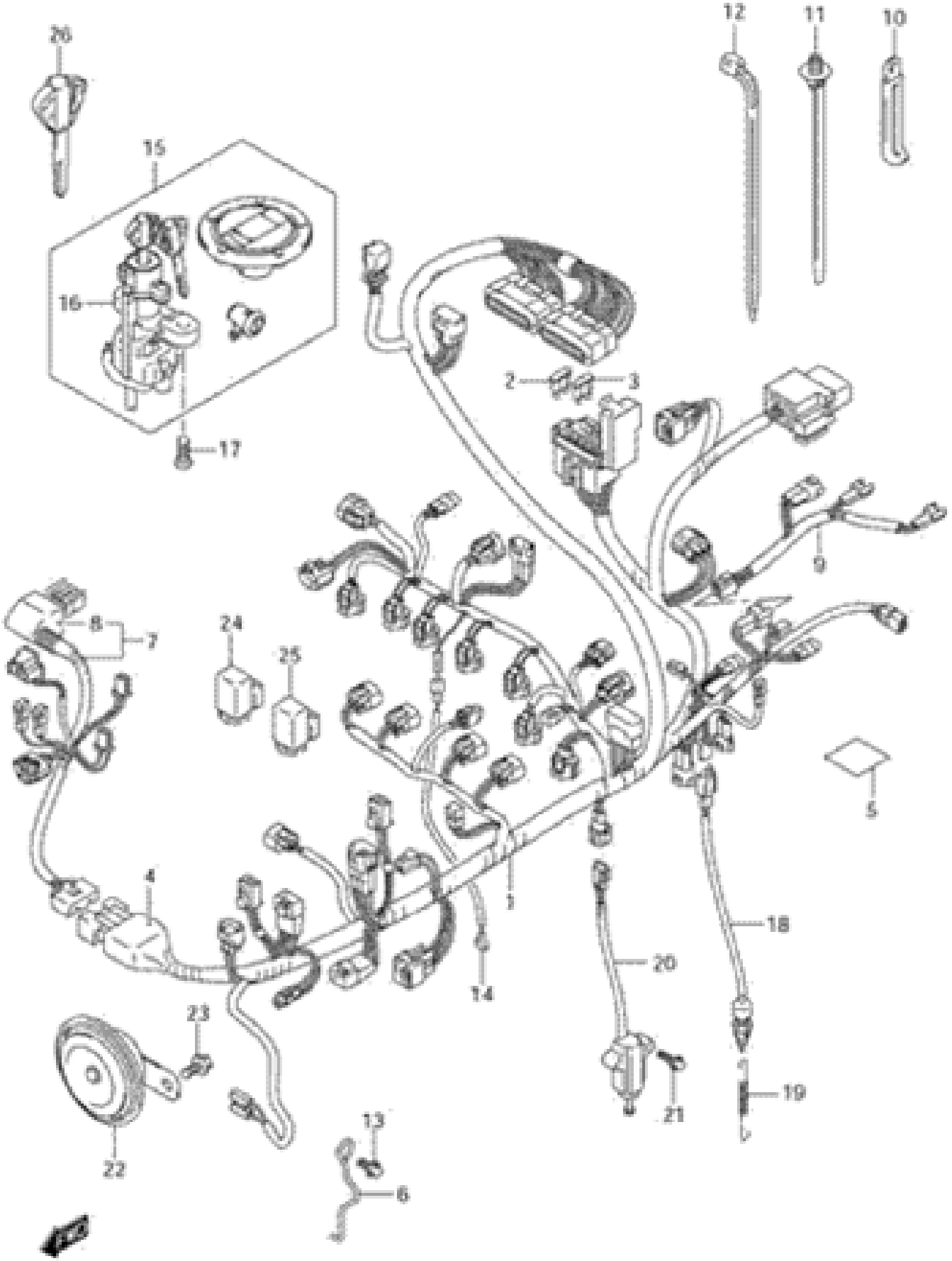

FIG.34

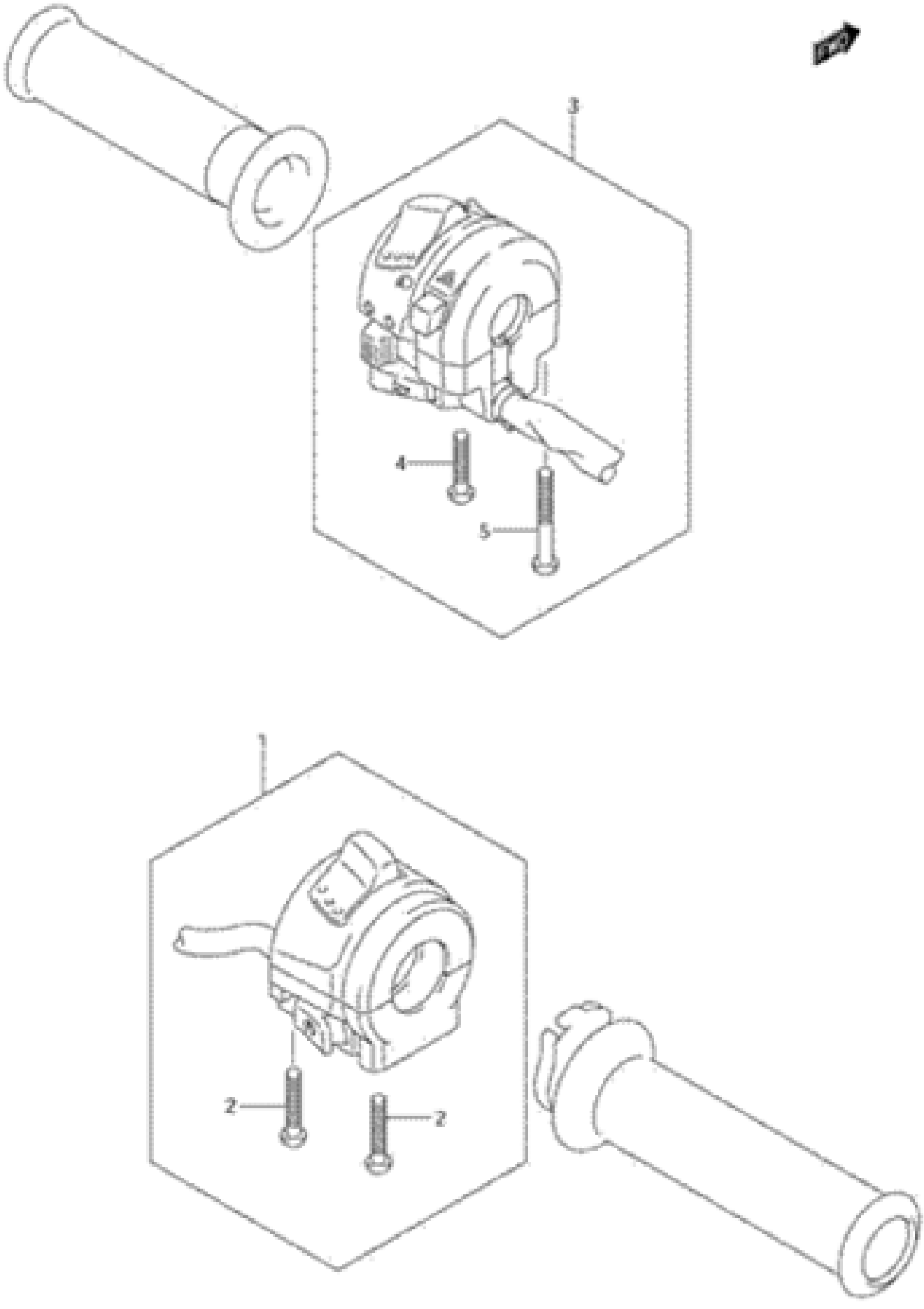

GSX-R600K6 E03 E28_034
HANDLE SWITCH

FIG.35

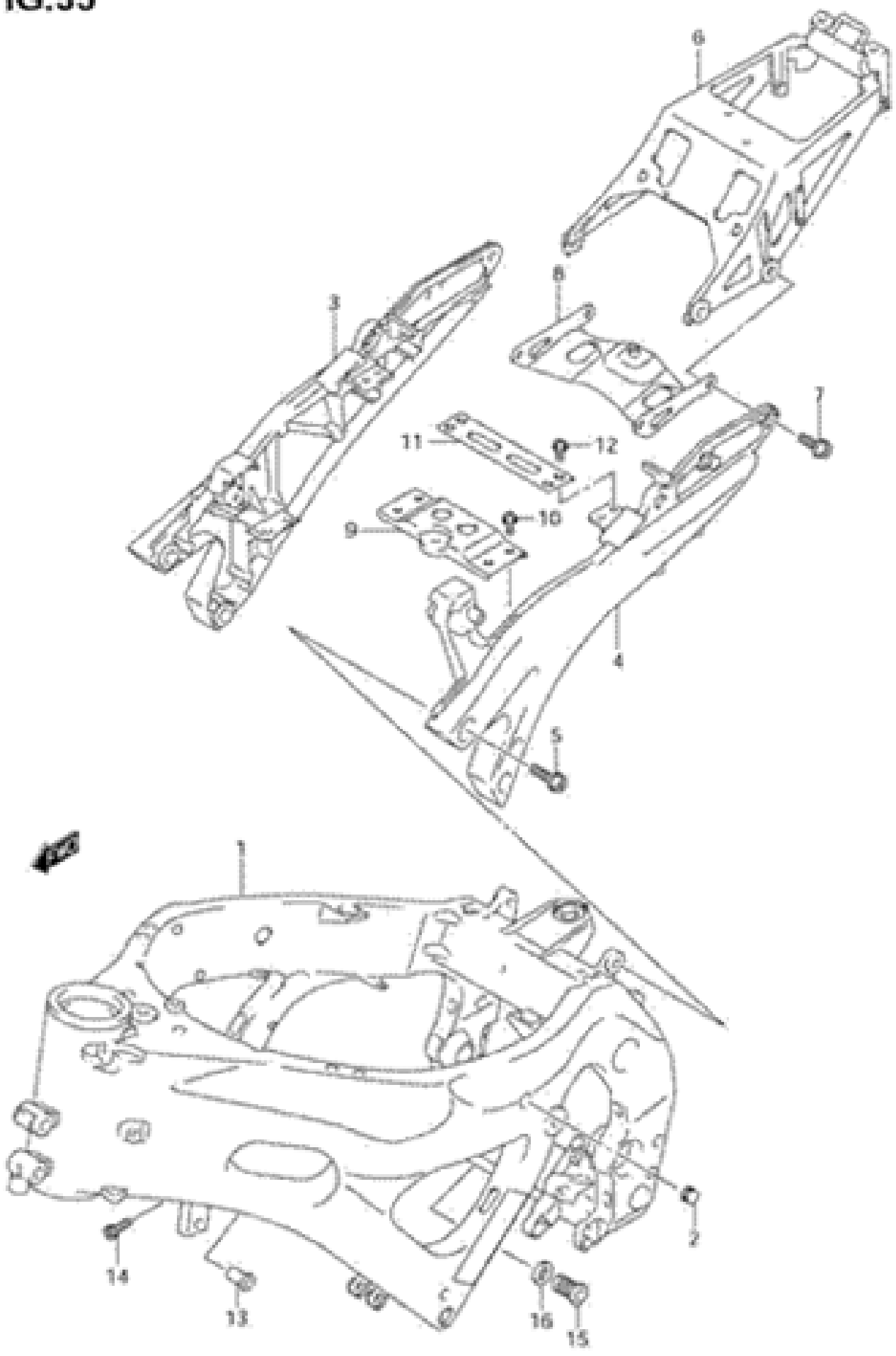

FIG.36

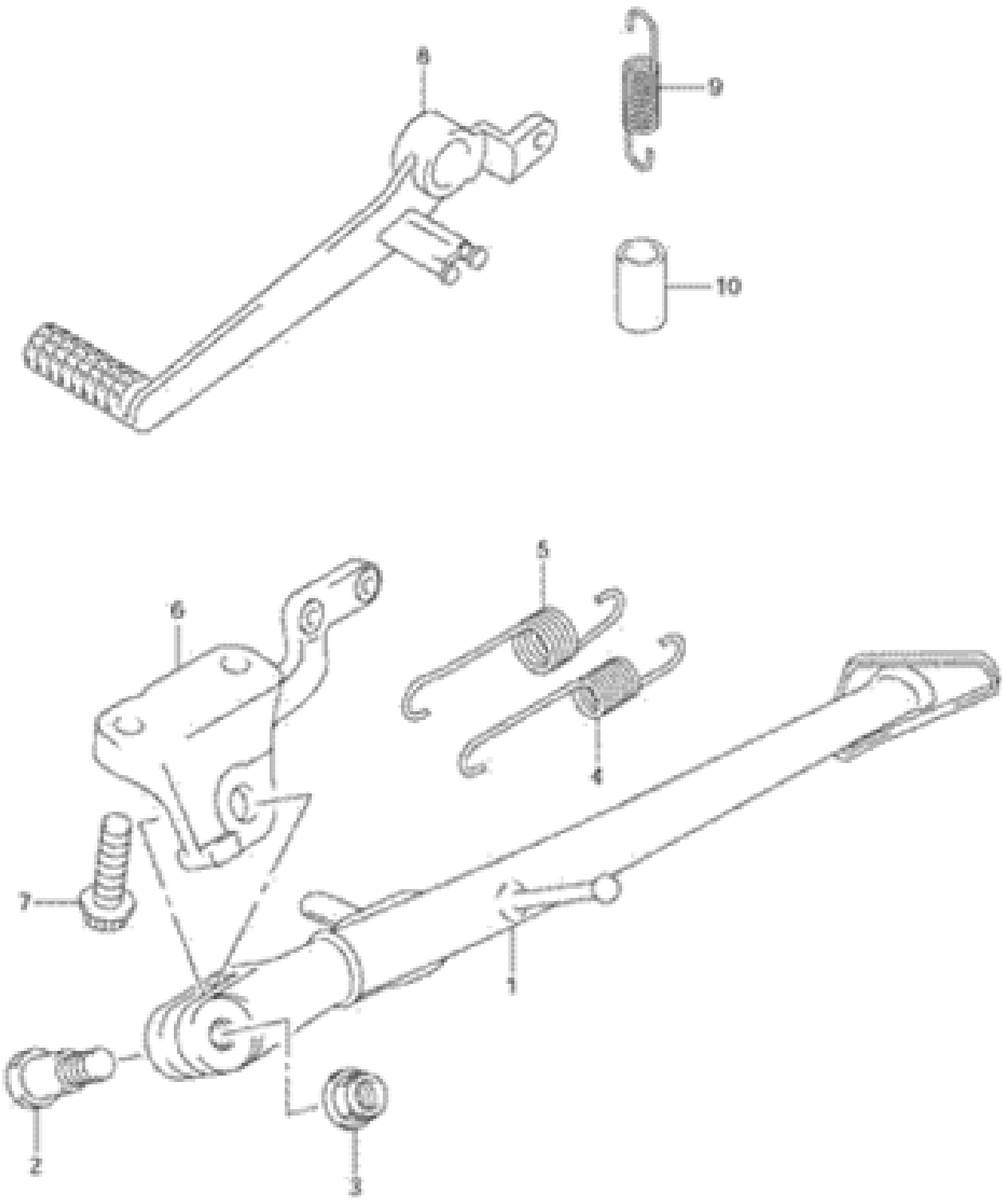

FIG.37

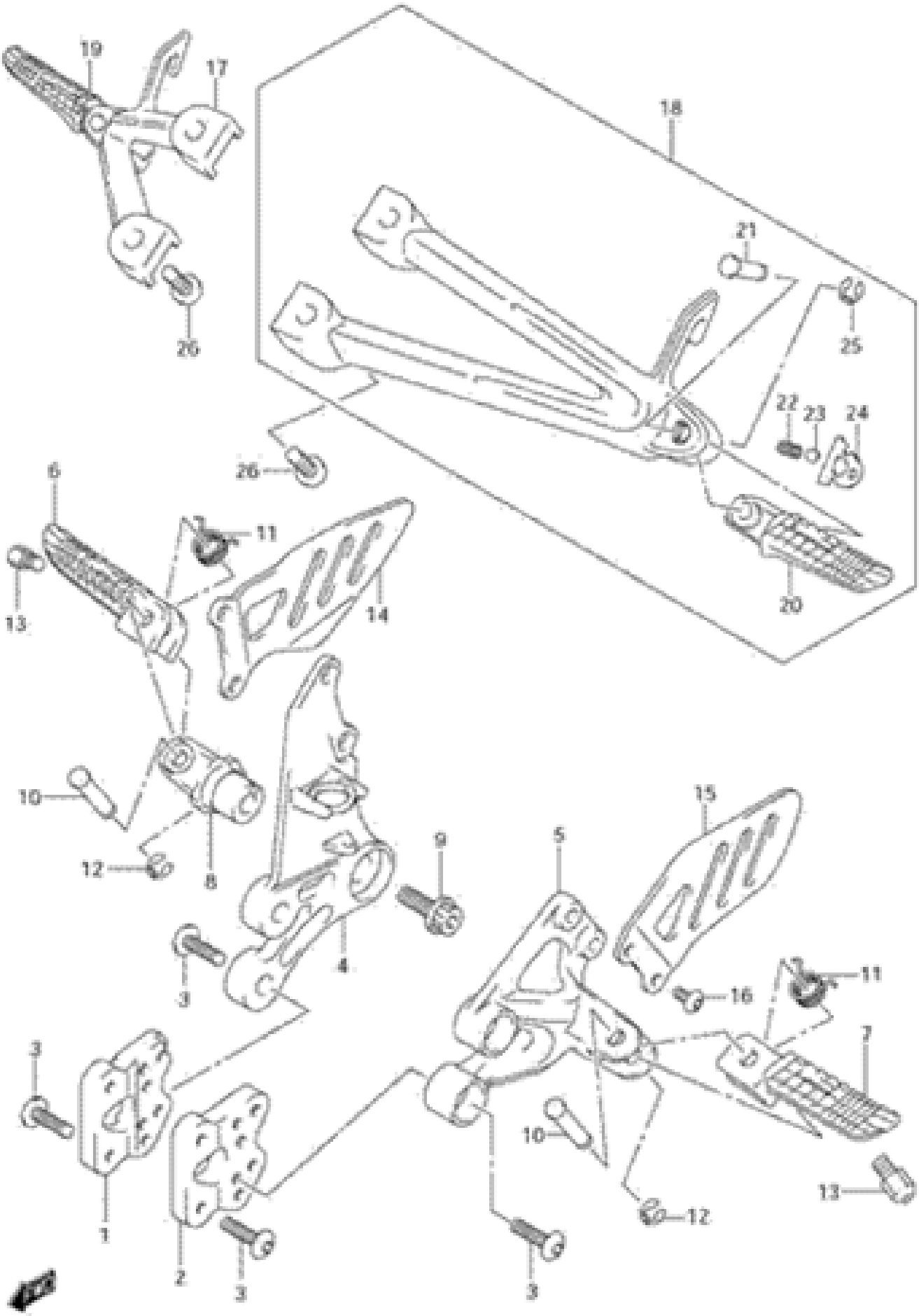

FIG.38

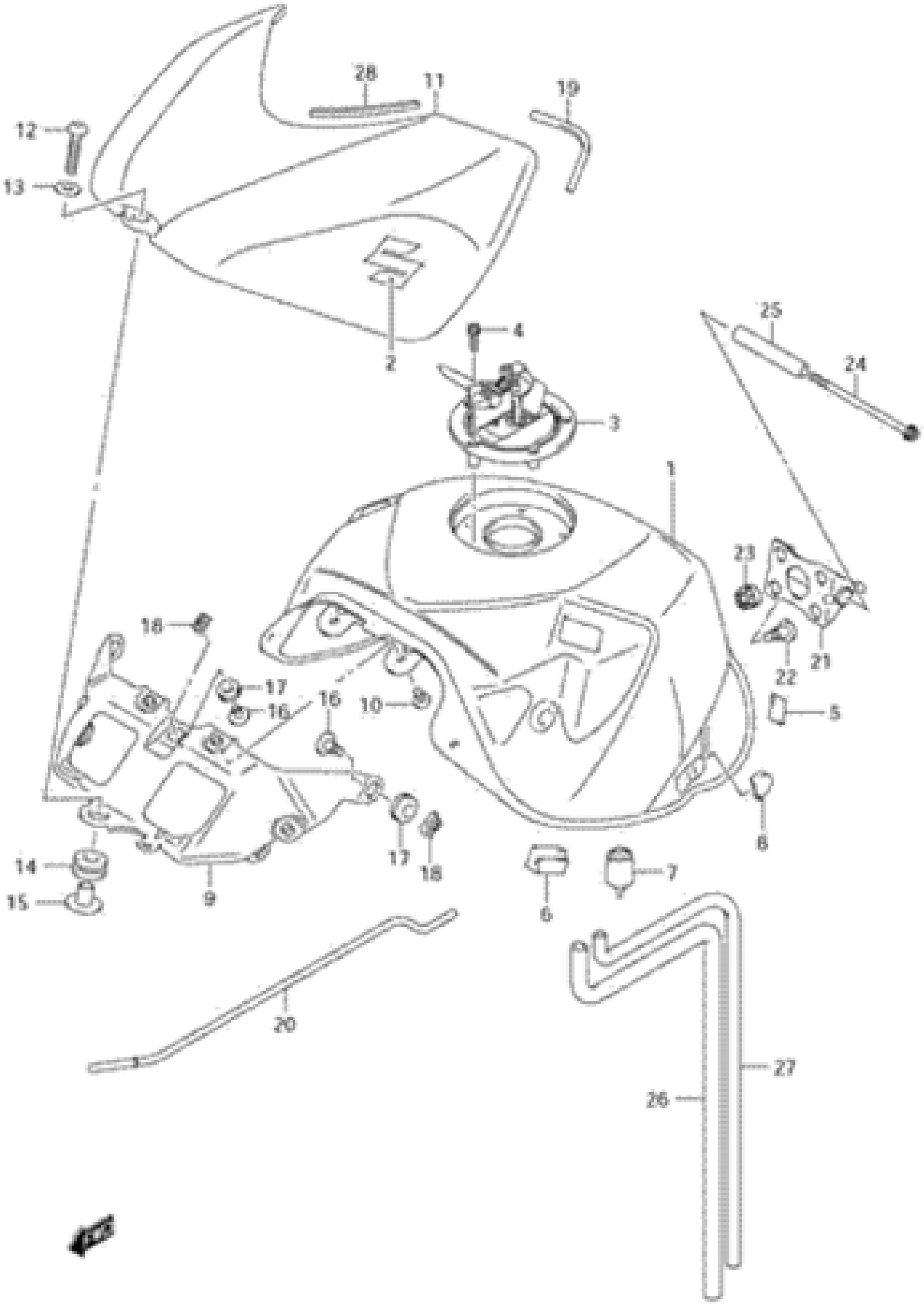
28
11
19
12
13
2
4
3
25
24
1
23
22
21
5
18
17
16
16
10
8
14
15
9
17
18
6
7
20
27
26

FIG.39

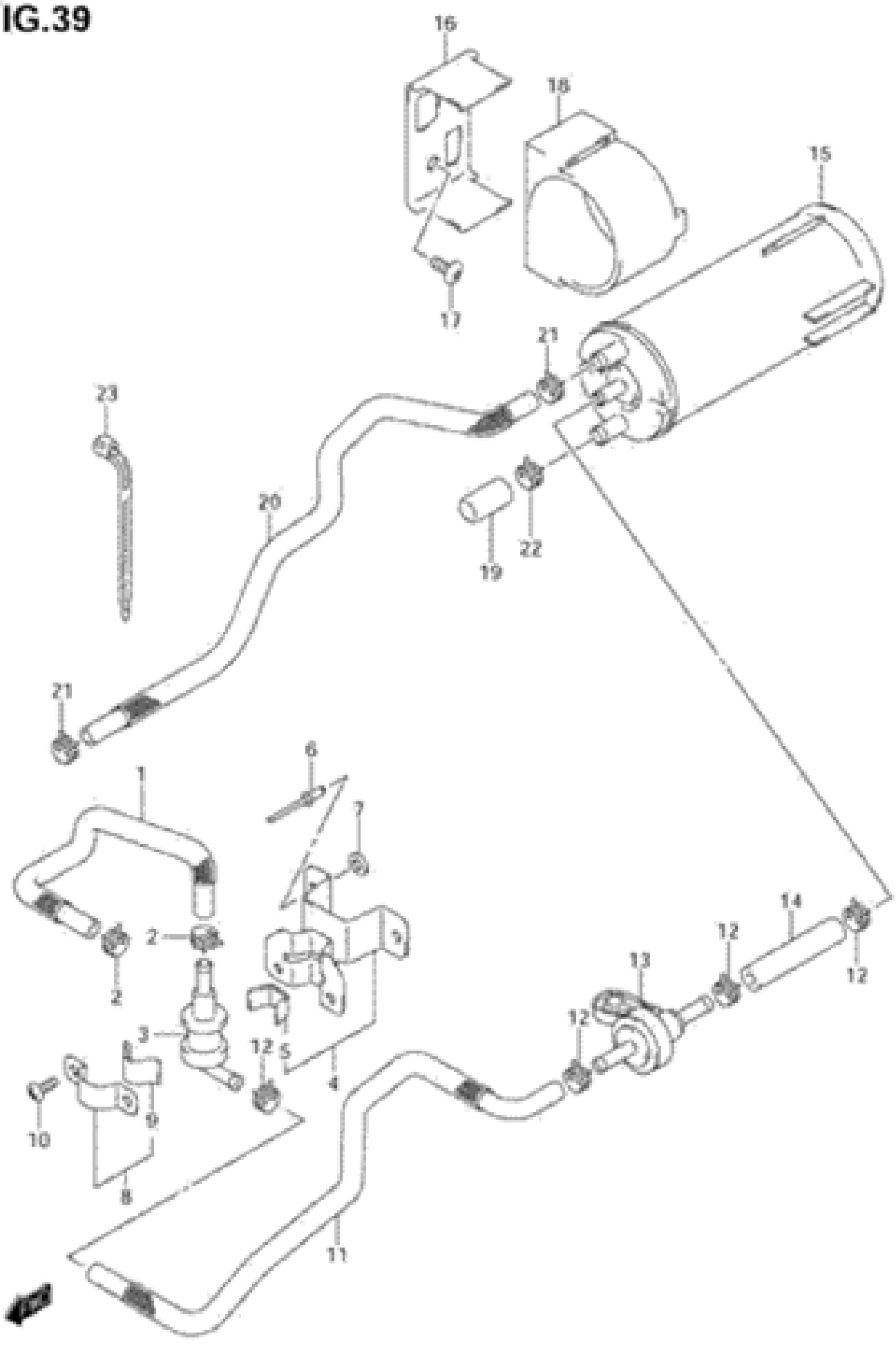

GSX-R600K6 E03 E28_039
EVAPO SYSTEM

FIG.4

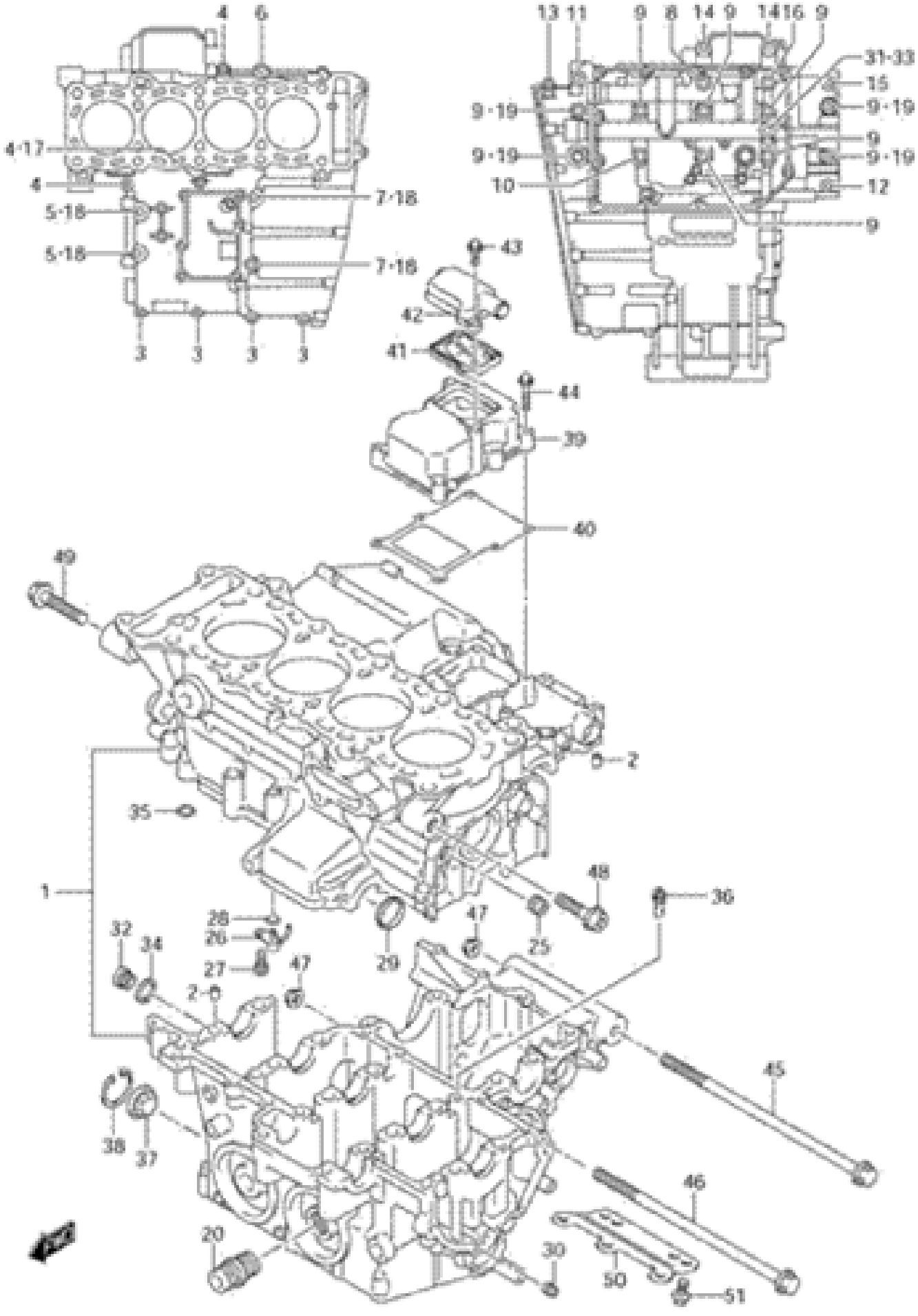
4
6
13
11
9
8
14
9
14
16
9
31-33
15
9-19
9
12
4-17
4
5-18
7-18
43
42
41
44
39
40
49
2
35
1
48
36
28
26
27
32
34
47
29
25
38
37
45
46
20
30
50
51
3

FIG.40

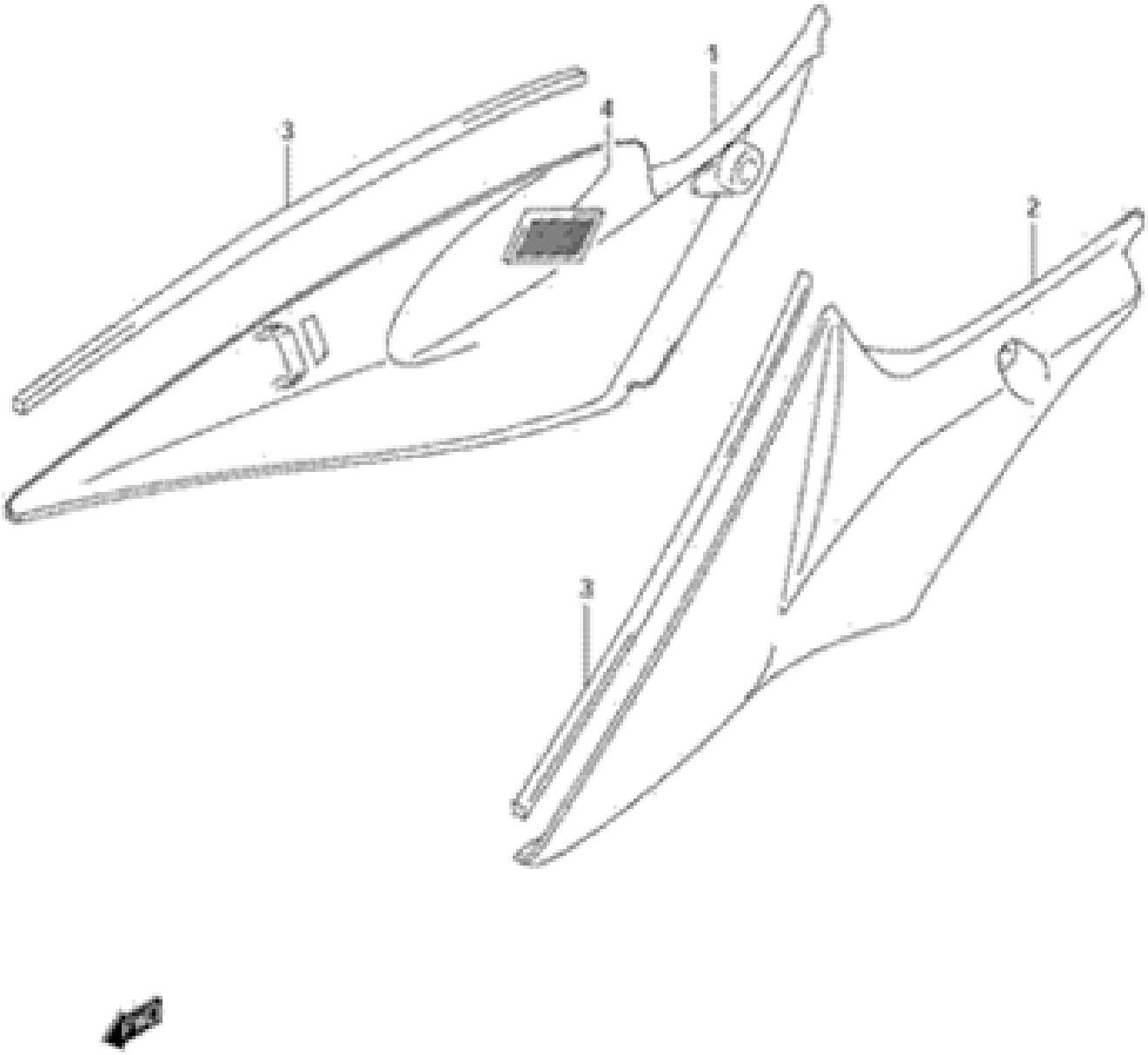

FIG.41

FIG.42

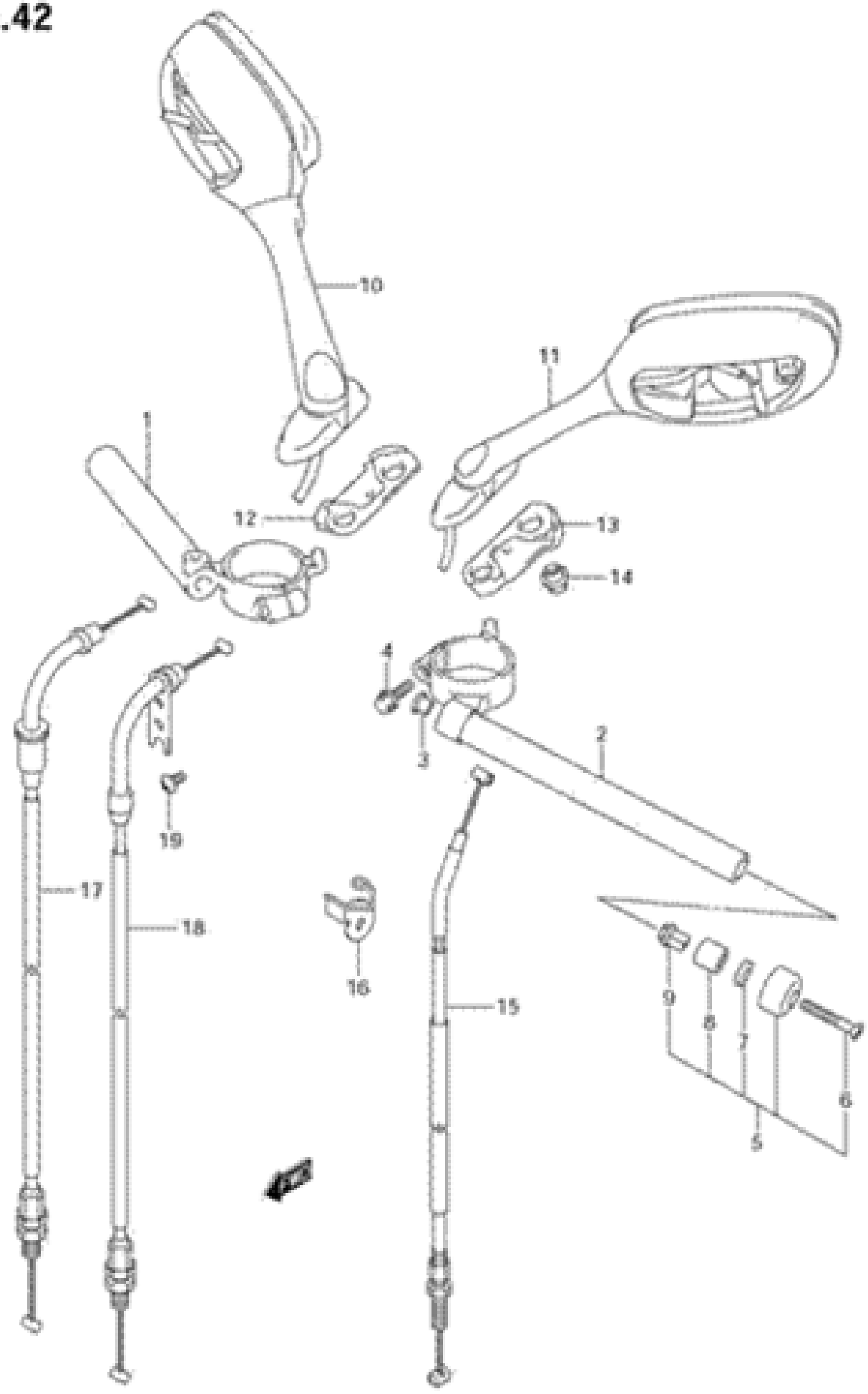

GSX-R600K6 E03 E28_042
HANDLE BAR

FIG.43

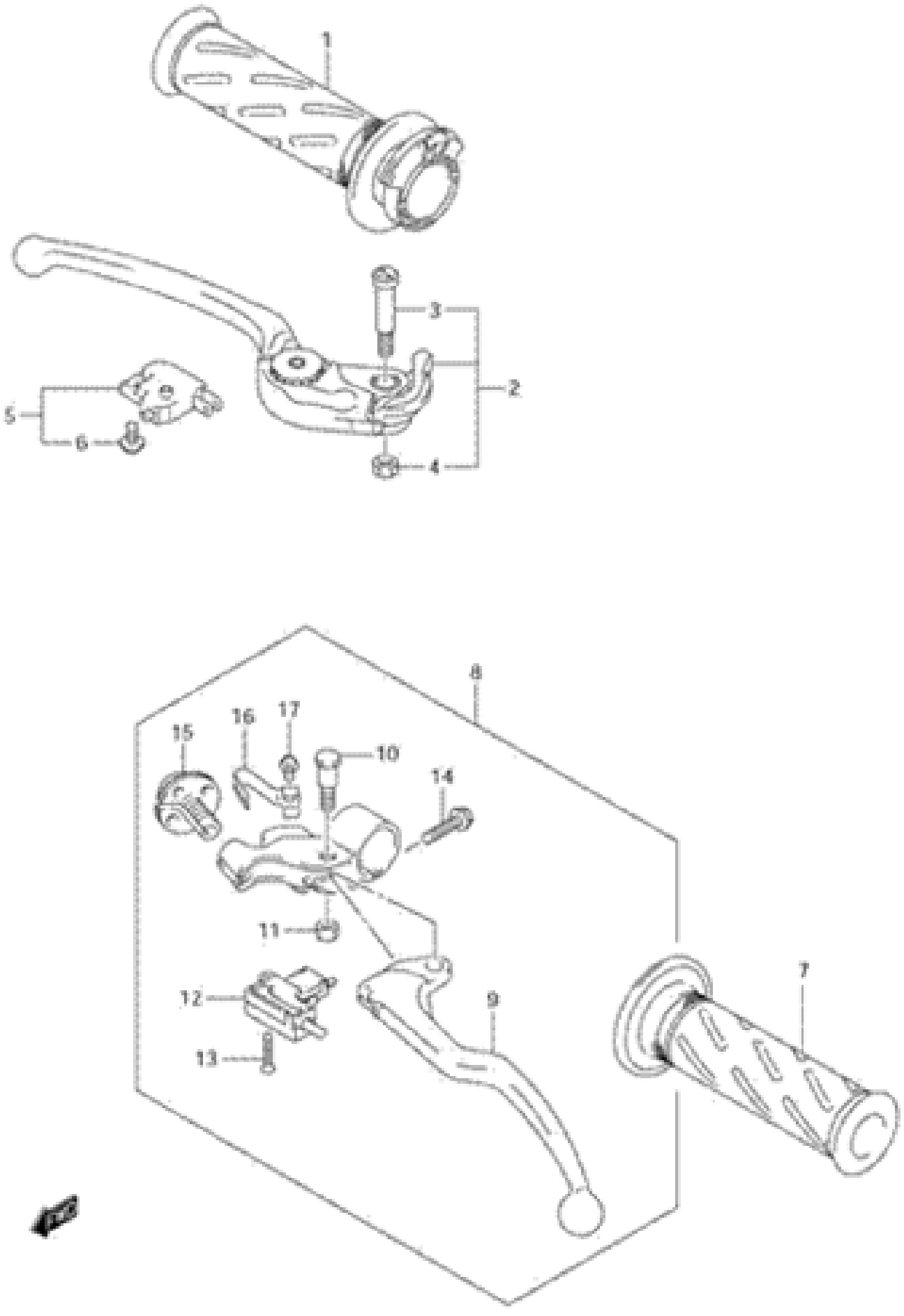

FIG.44

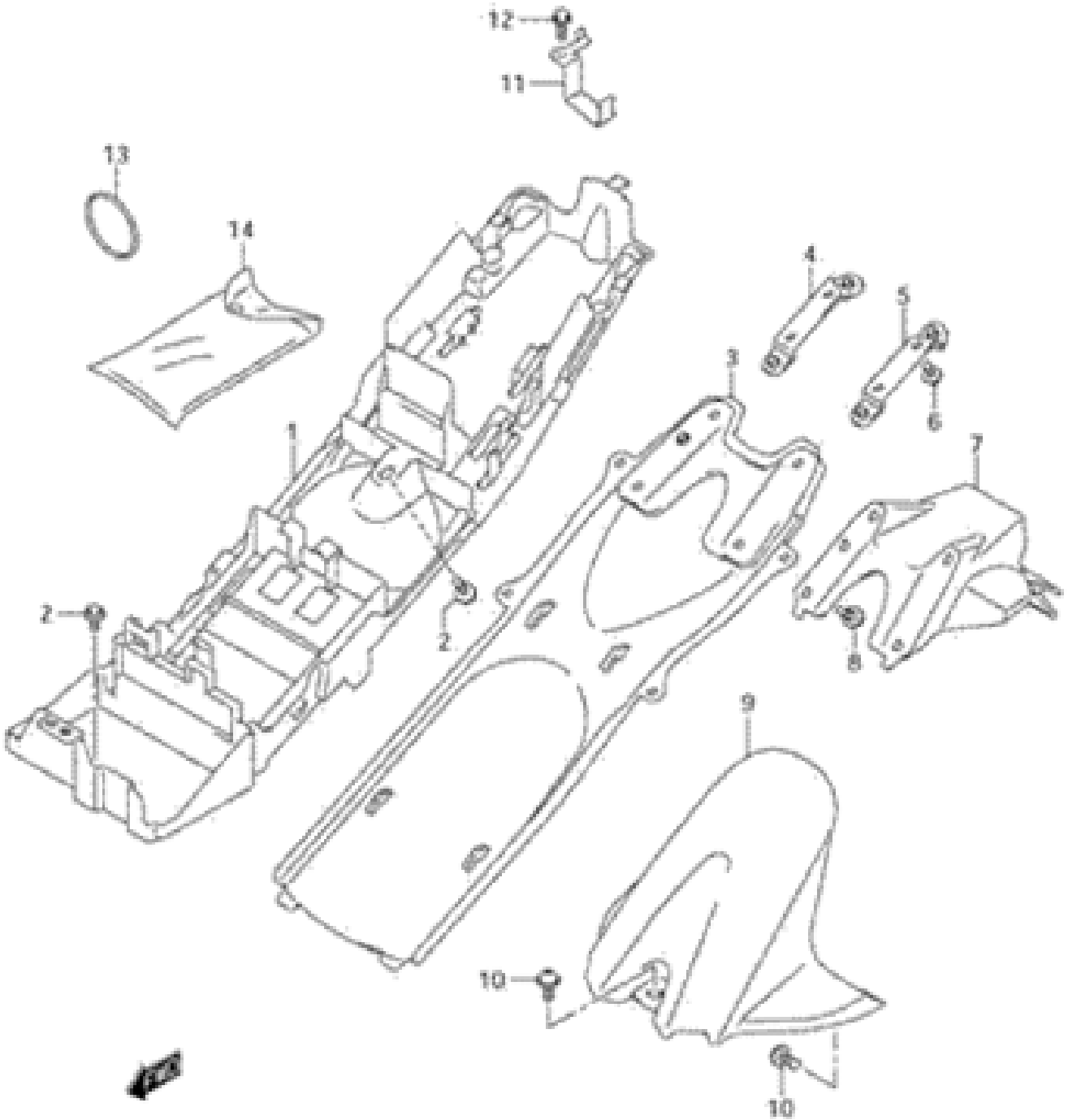

FIG.45

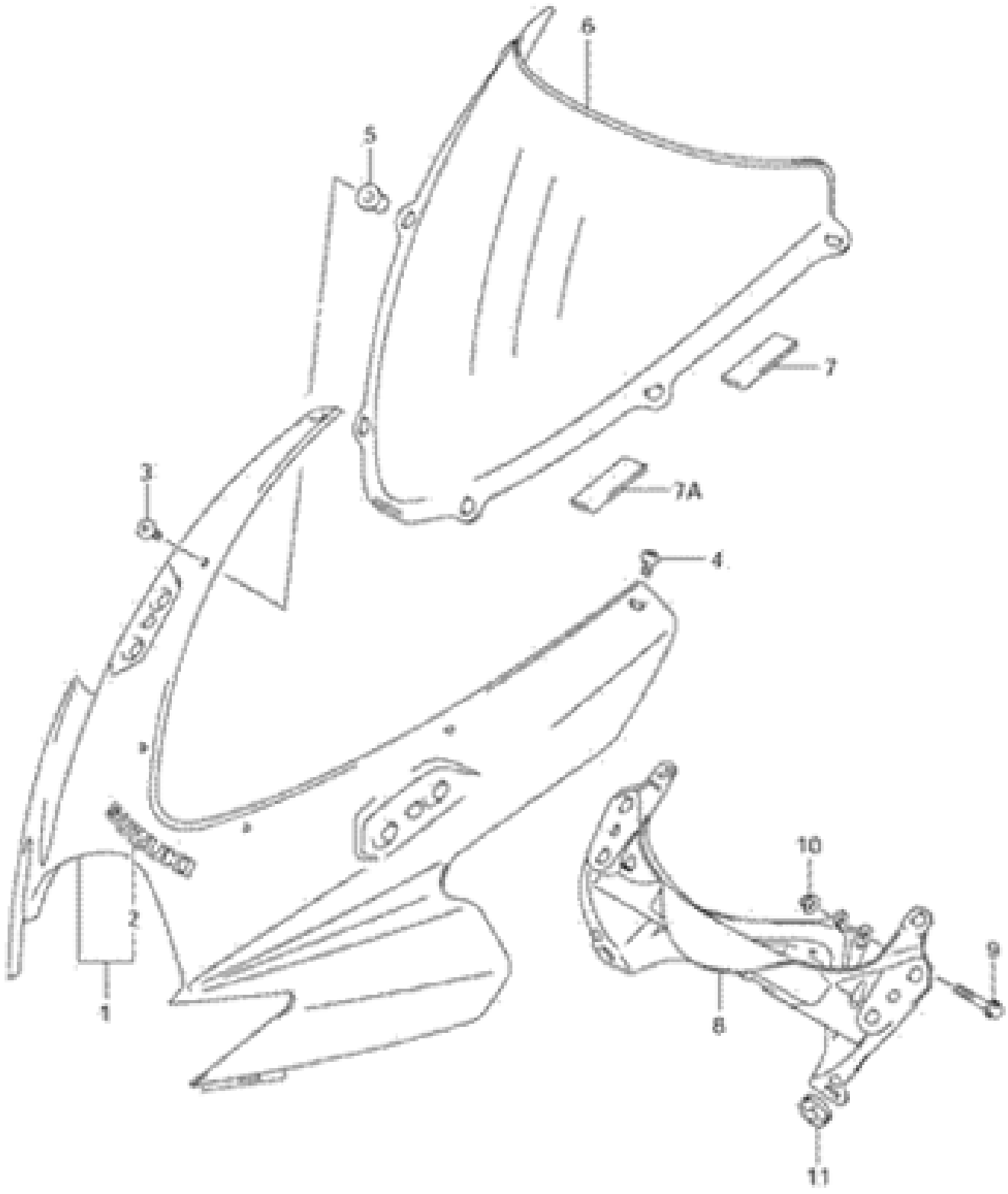

FIG.46

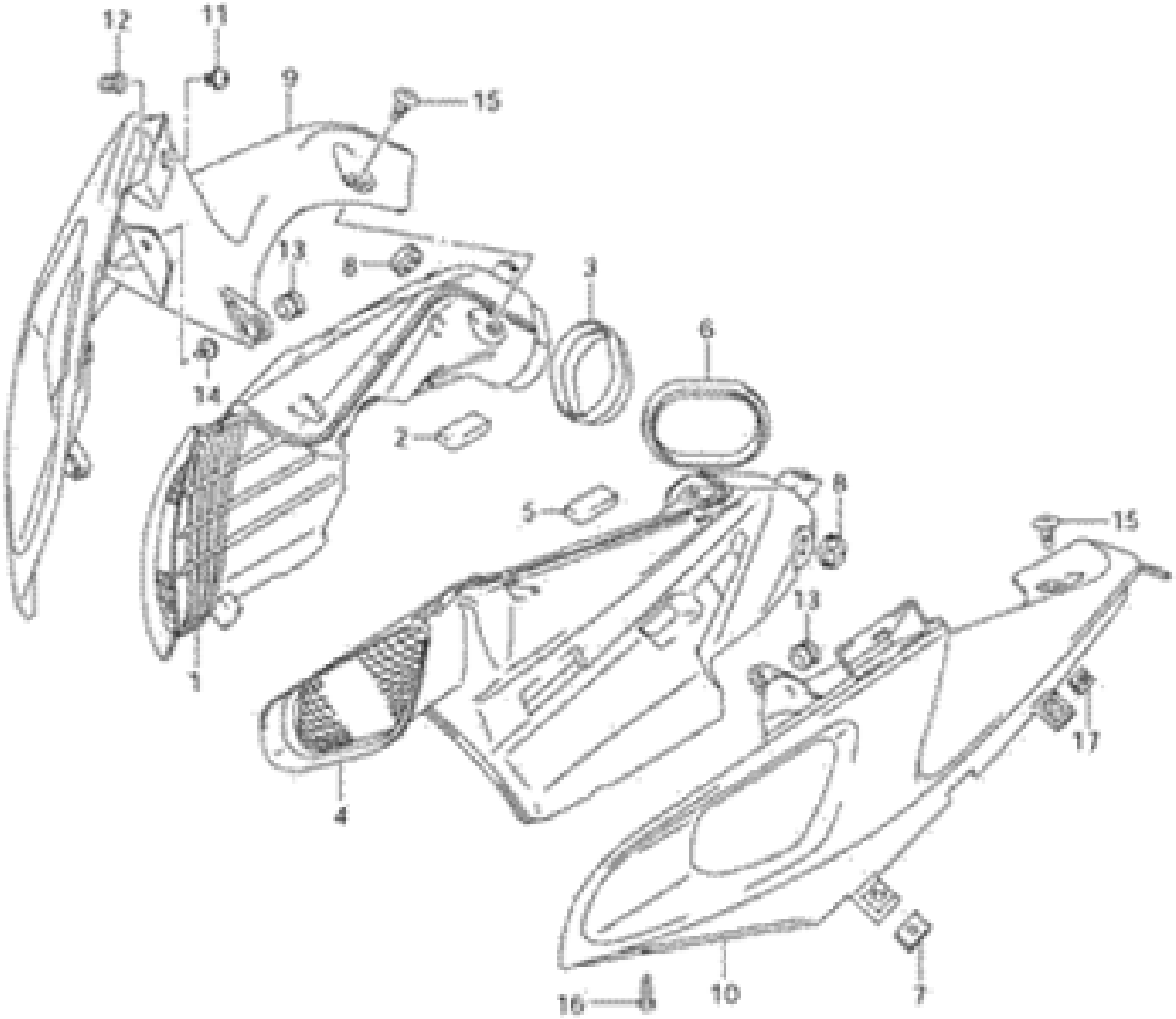

FIG.47

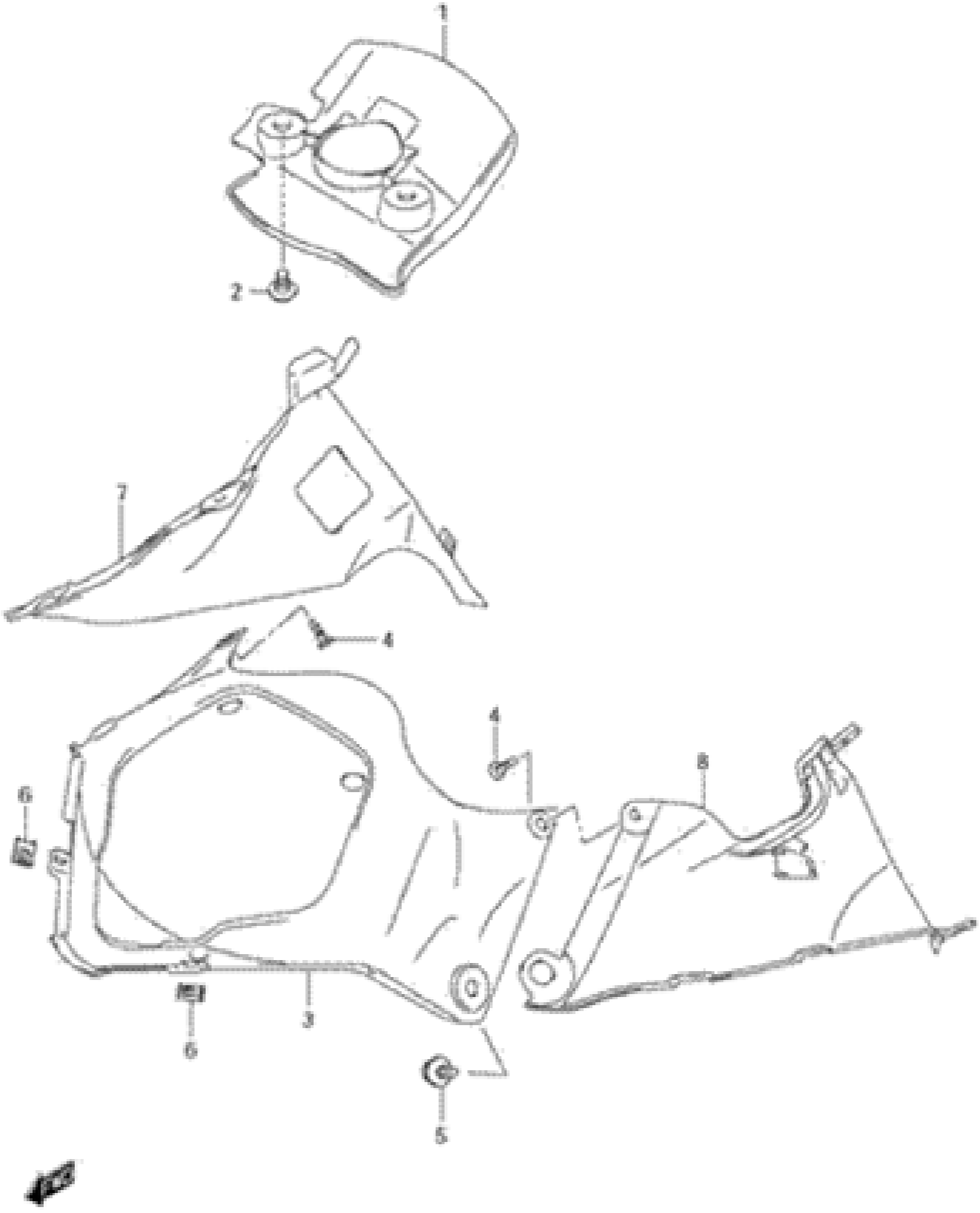

FIG.48

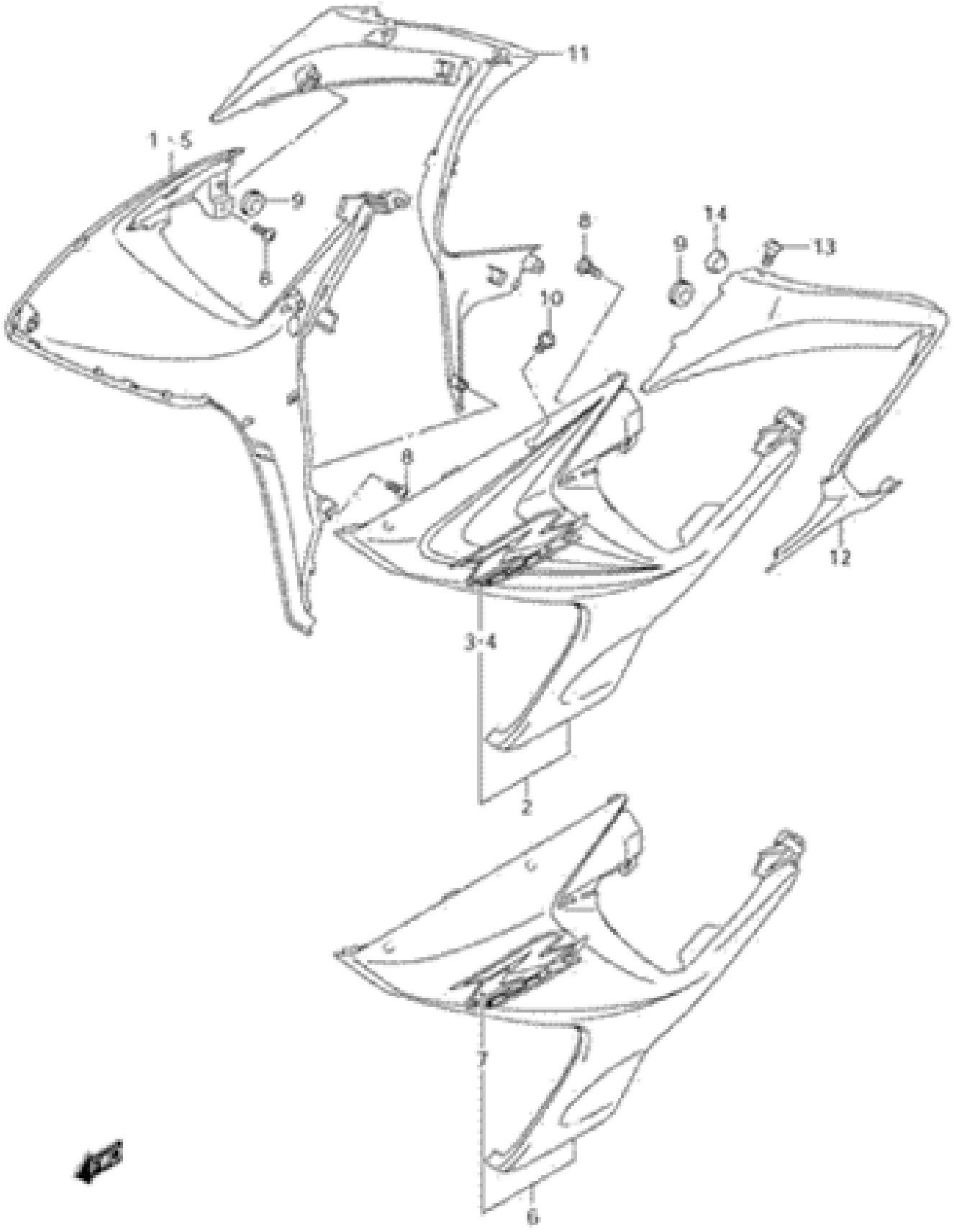

FIG.48A

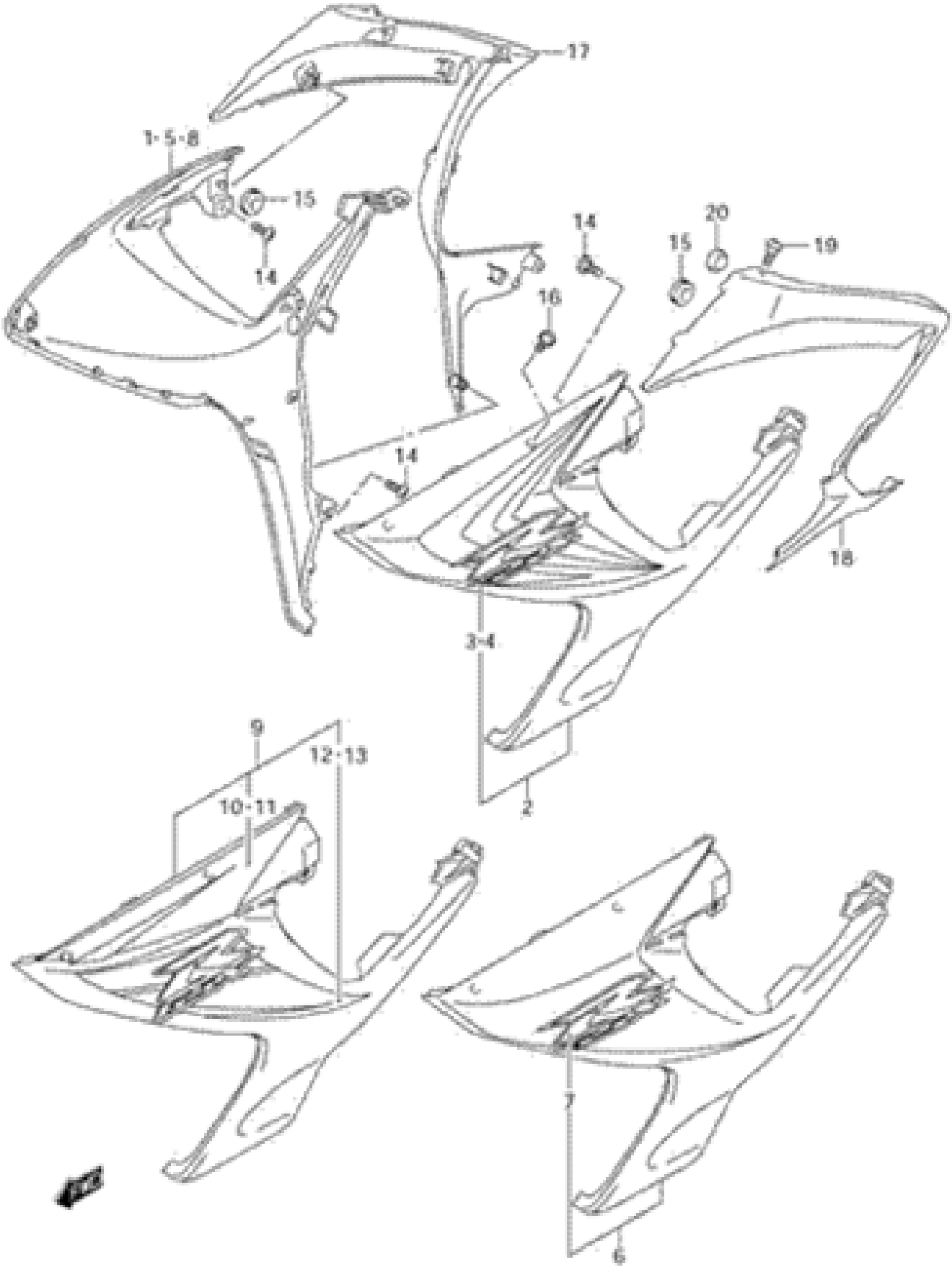

FIG.49

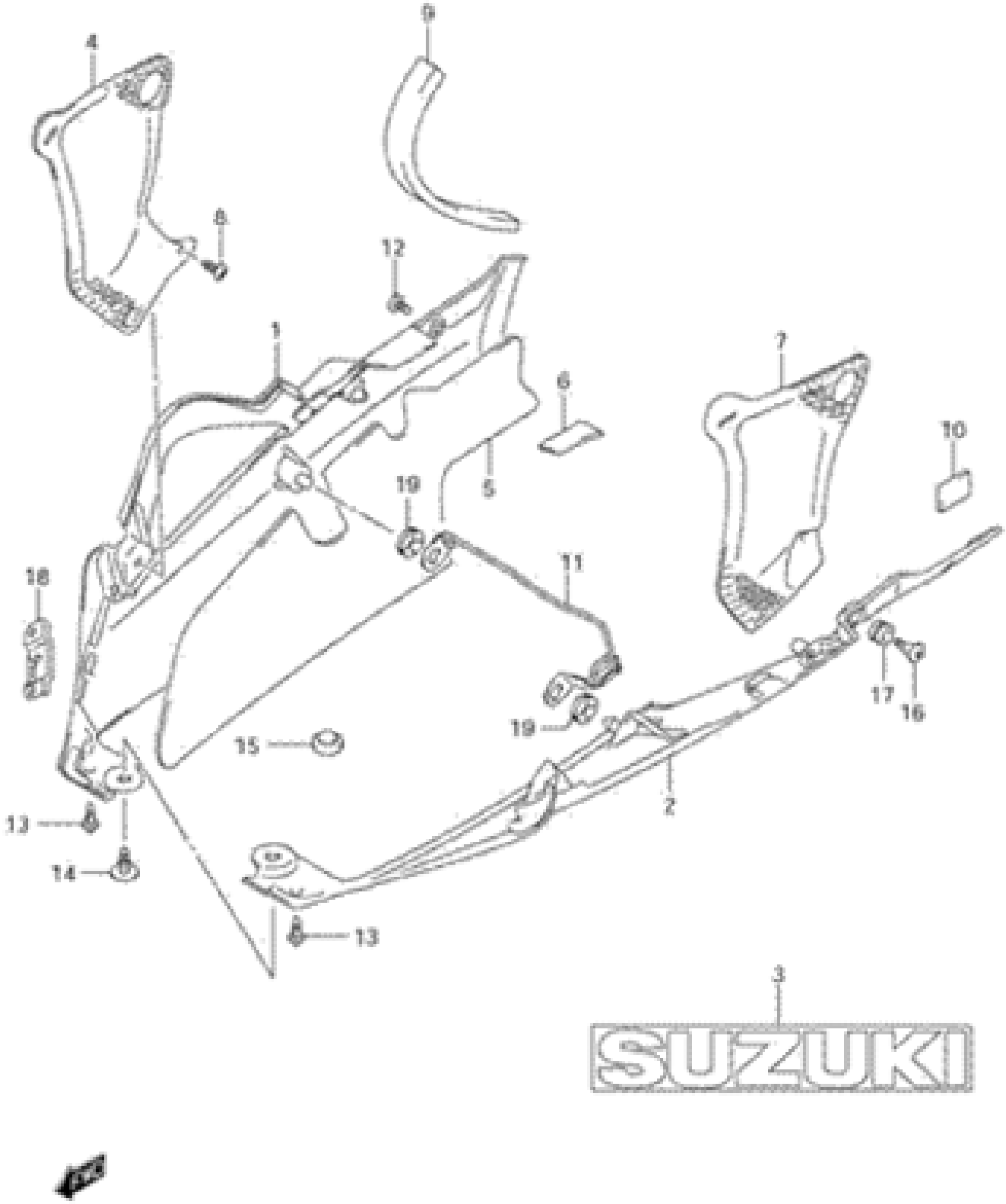

FIG.5

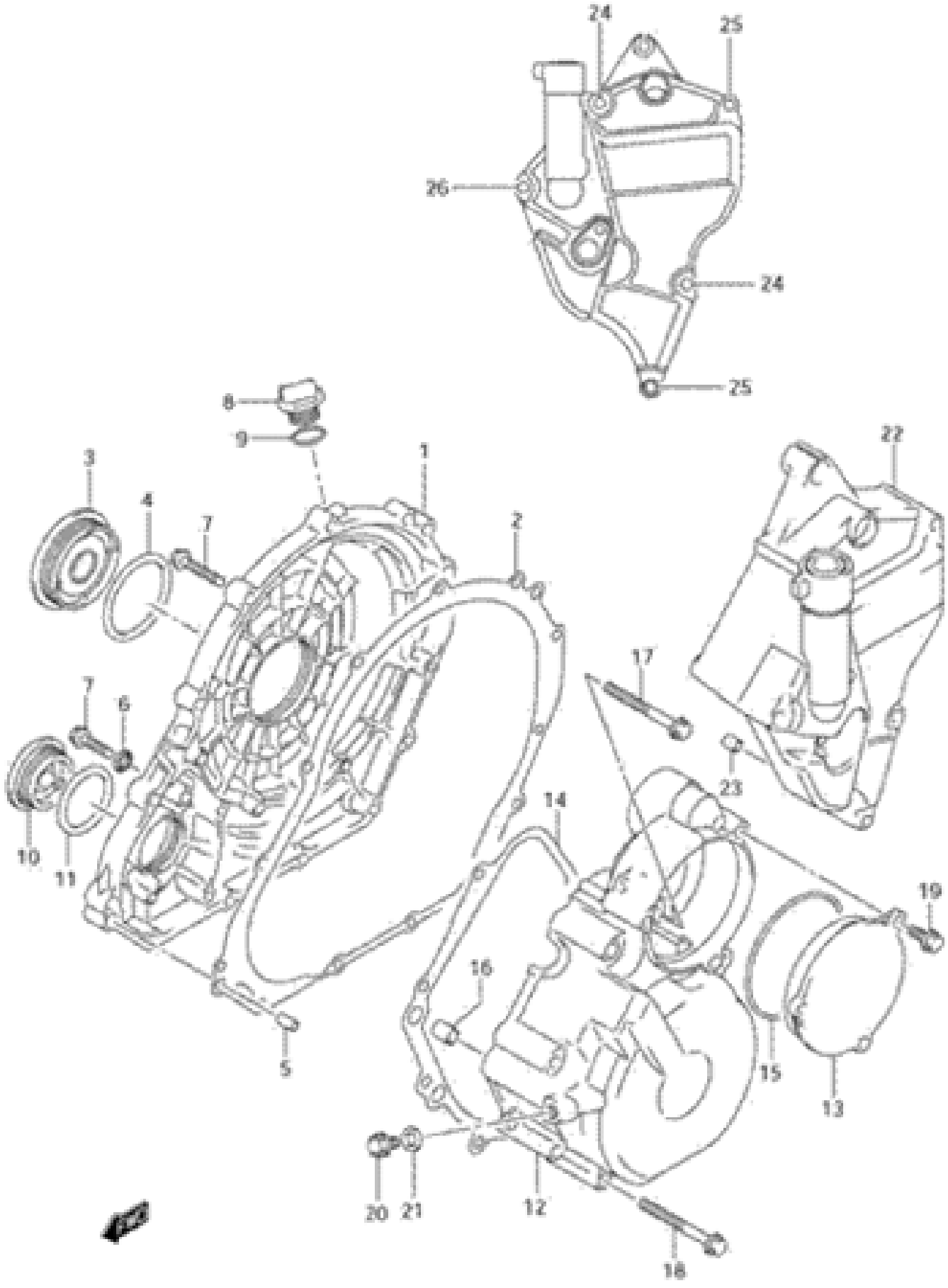

GSX-R600K6 E03 E28_005
CRANKCASE COVER

FIG.50

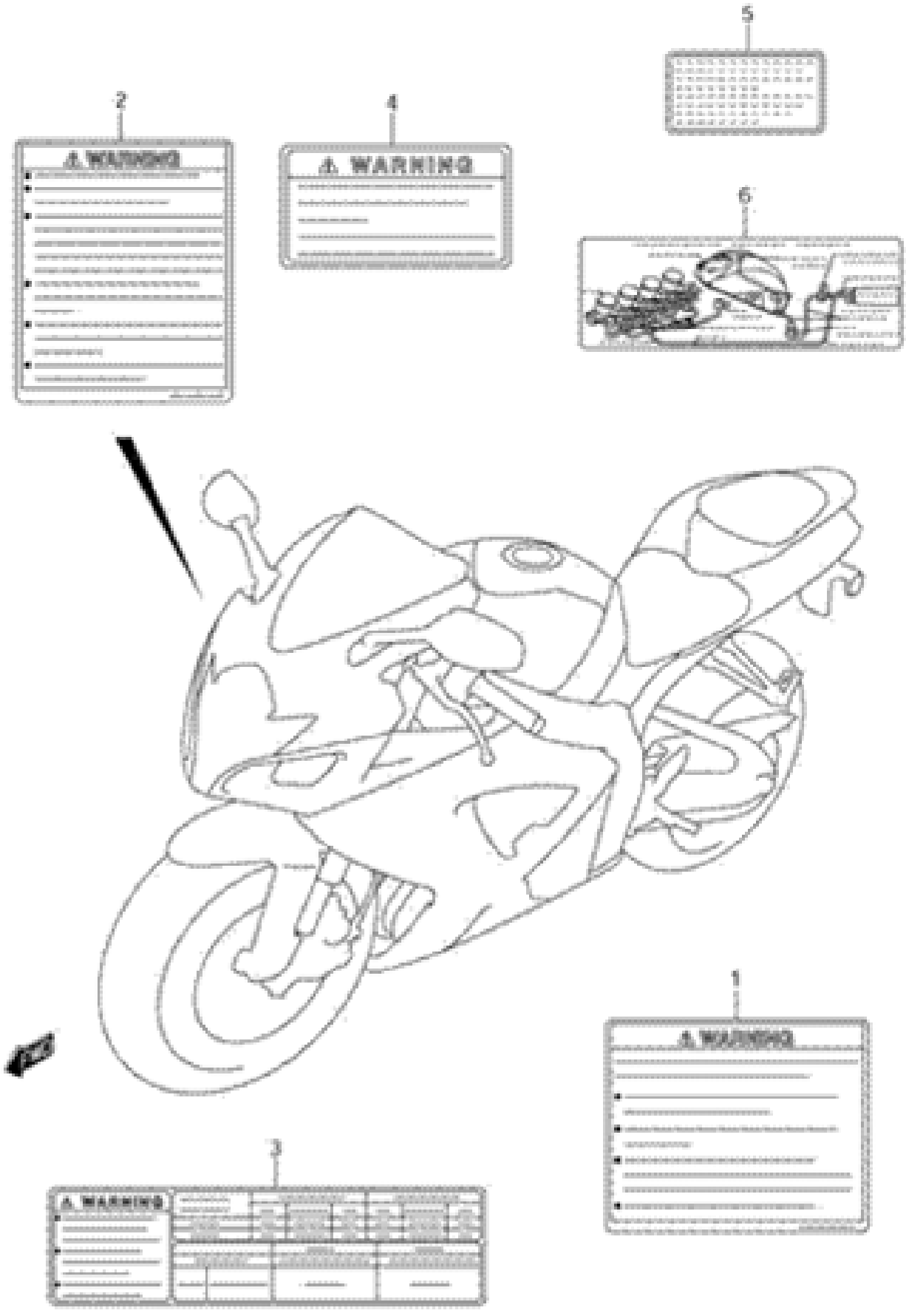

FIG.51

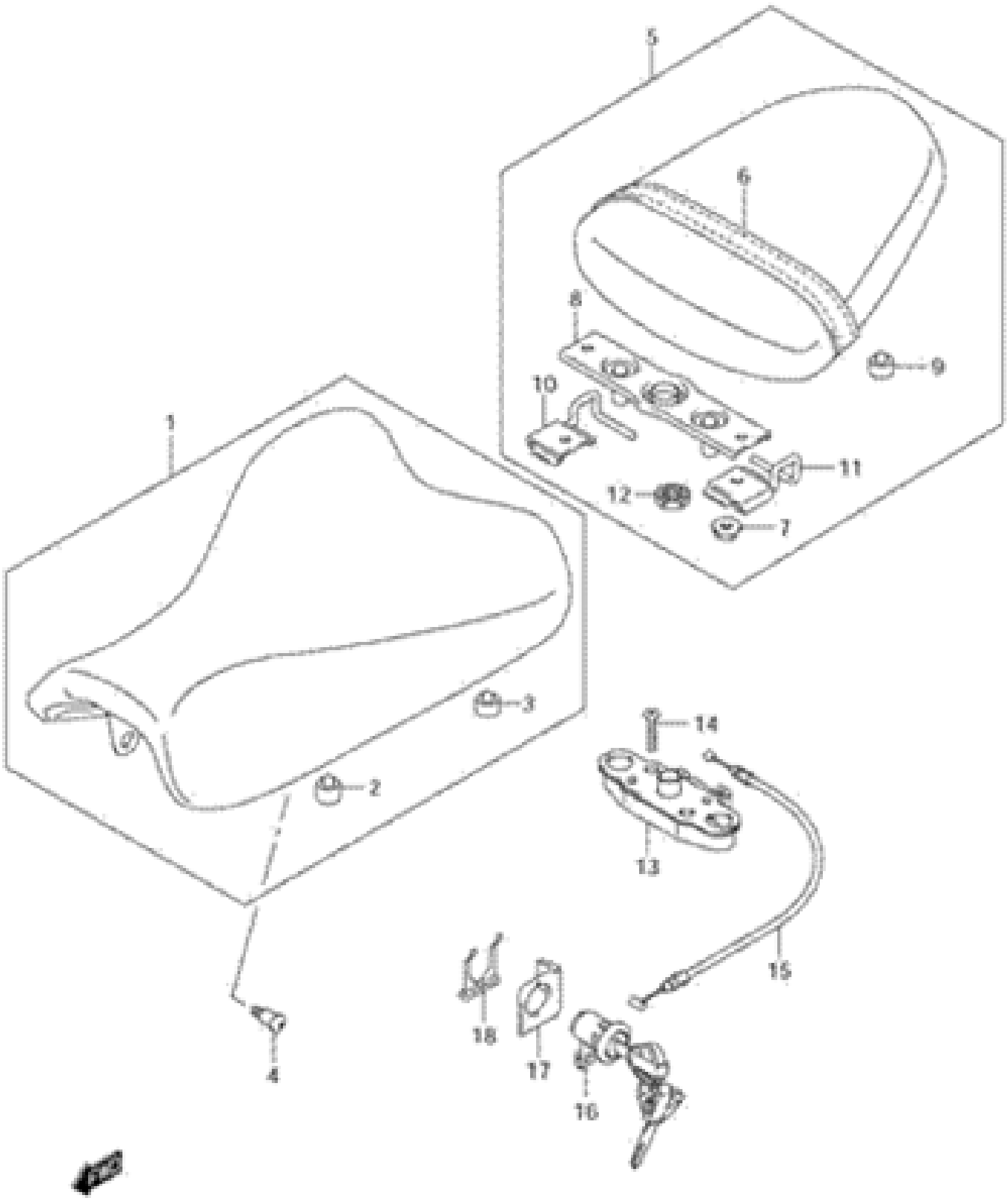

FIG.52

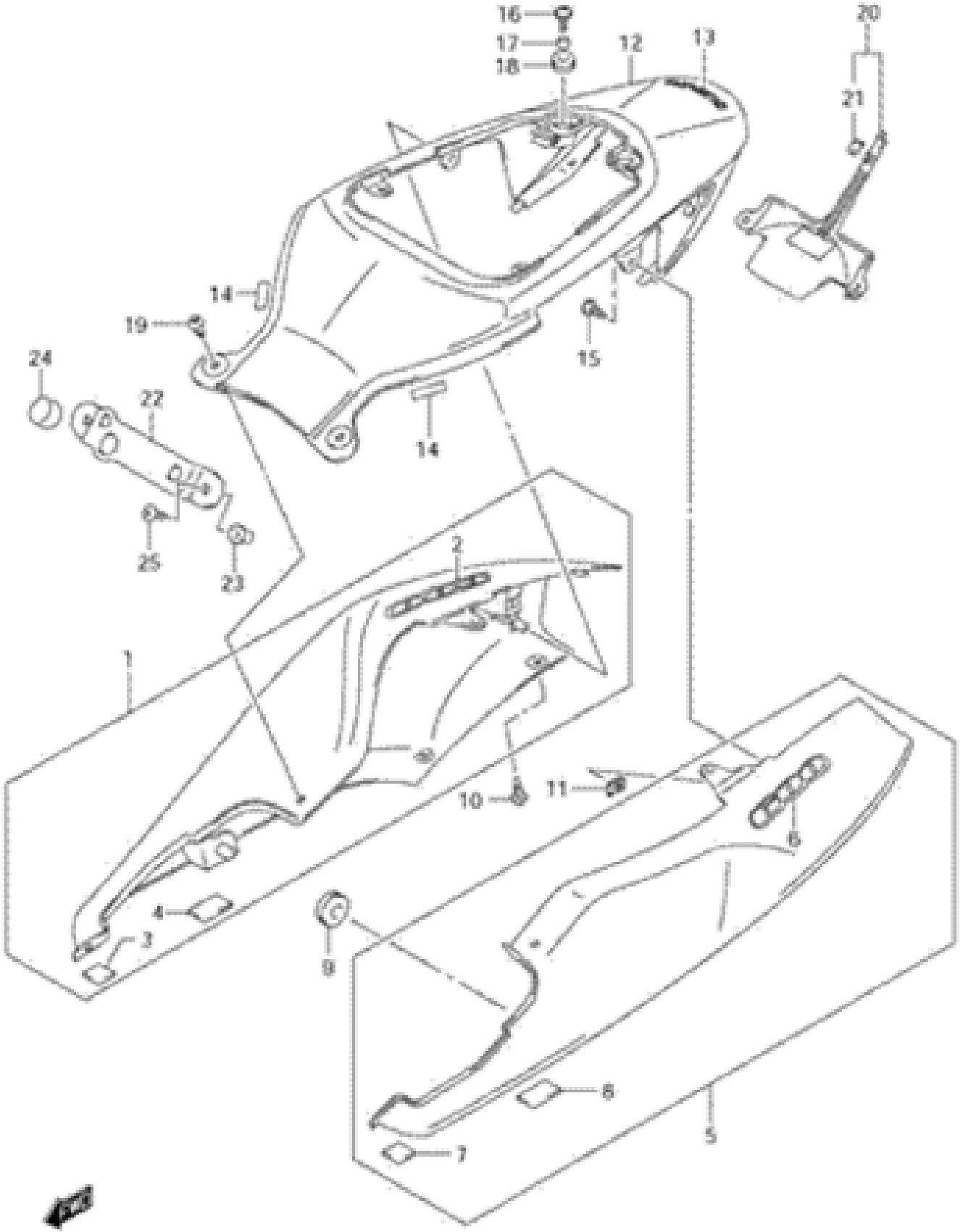

FIG.53

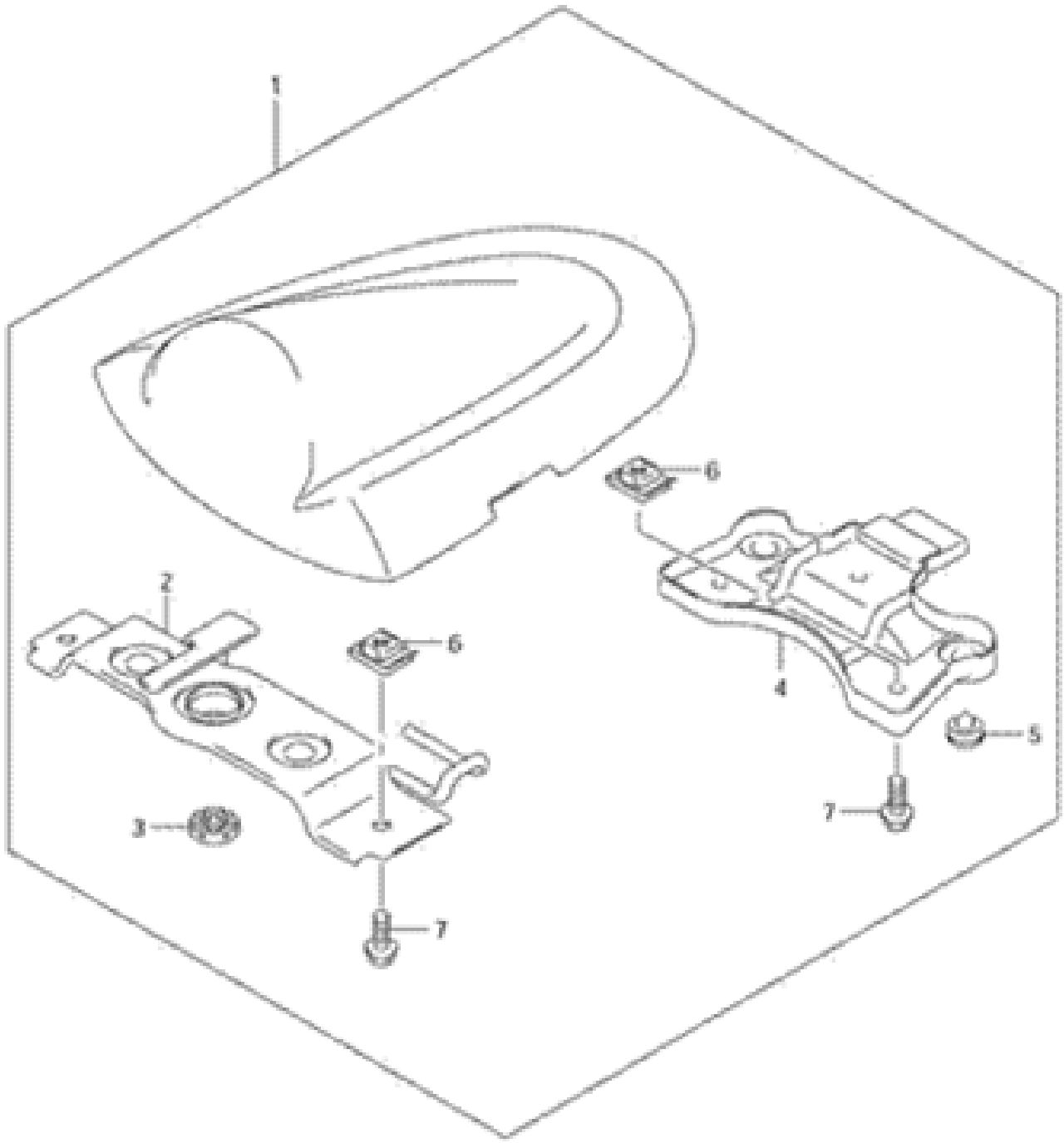

FIG.54

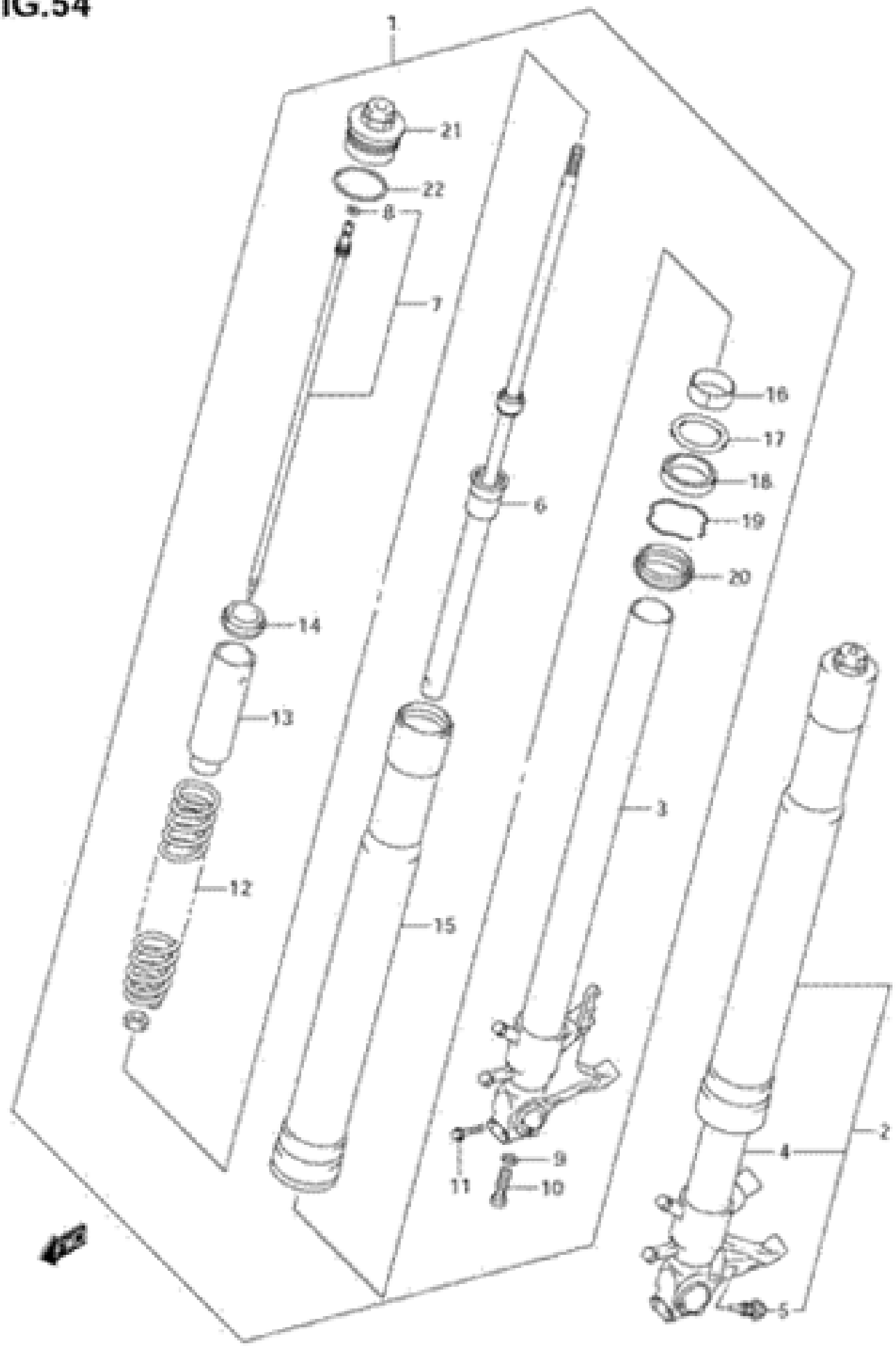

GSX-R600K6 E03 E28_054
FRONT DAMPER

FIG.55

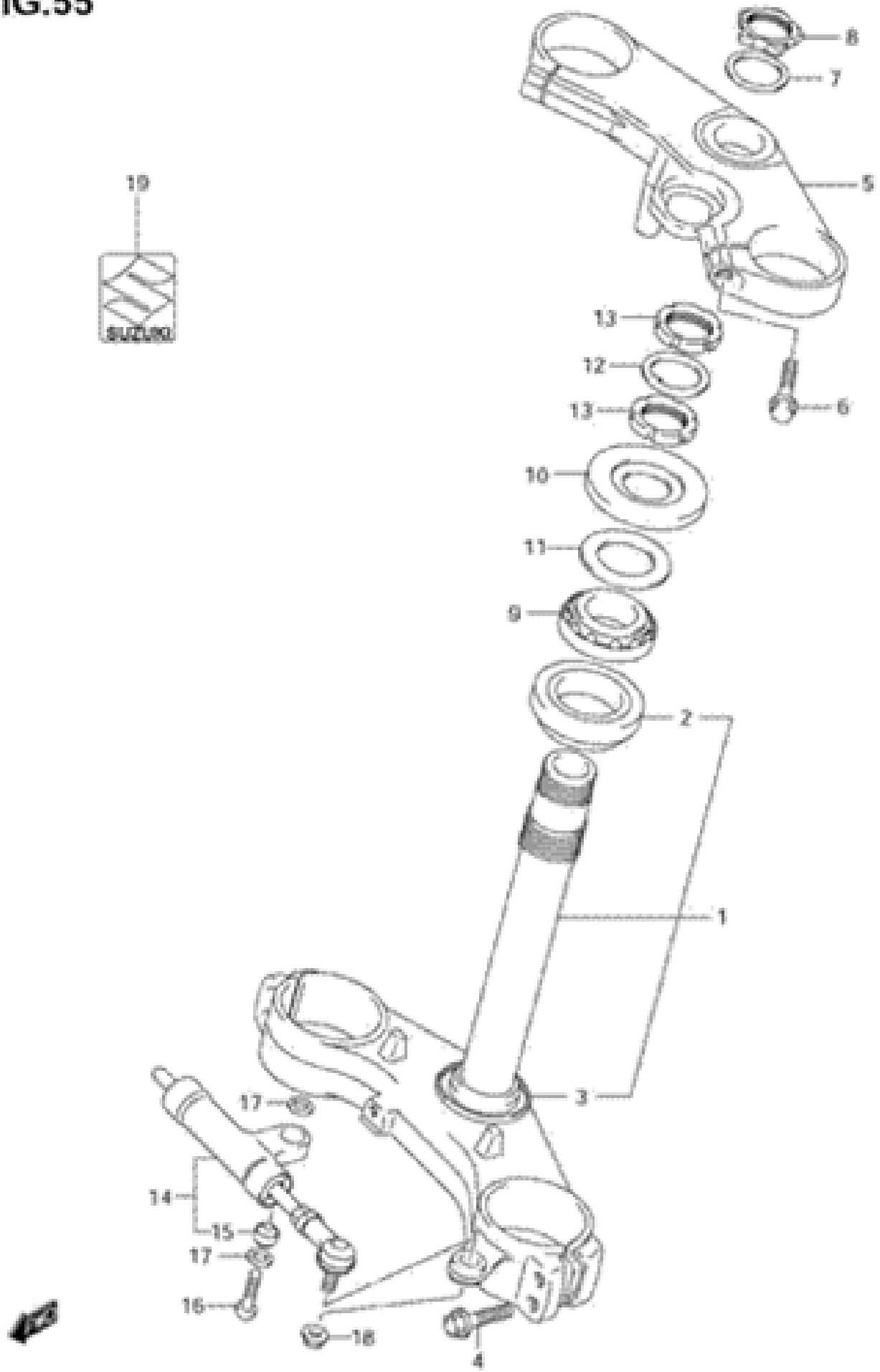

FIG.56

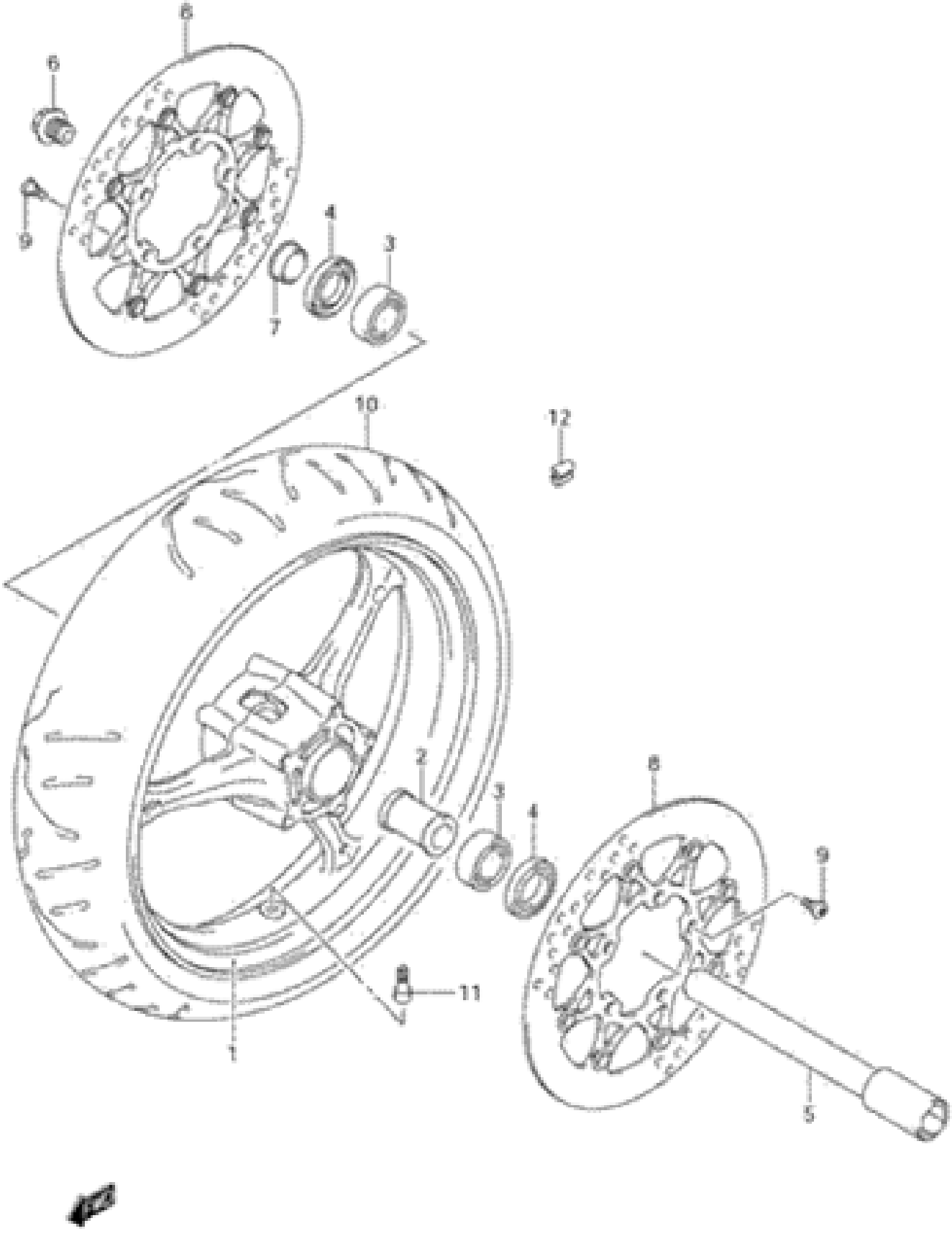

FIG.57

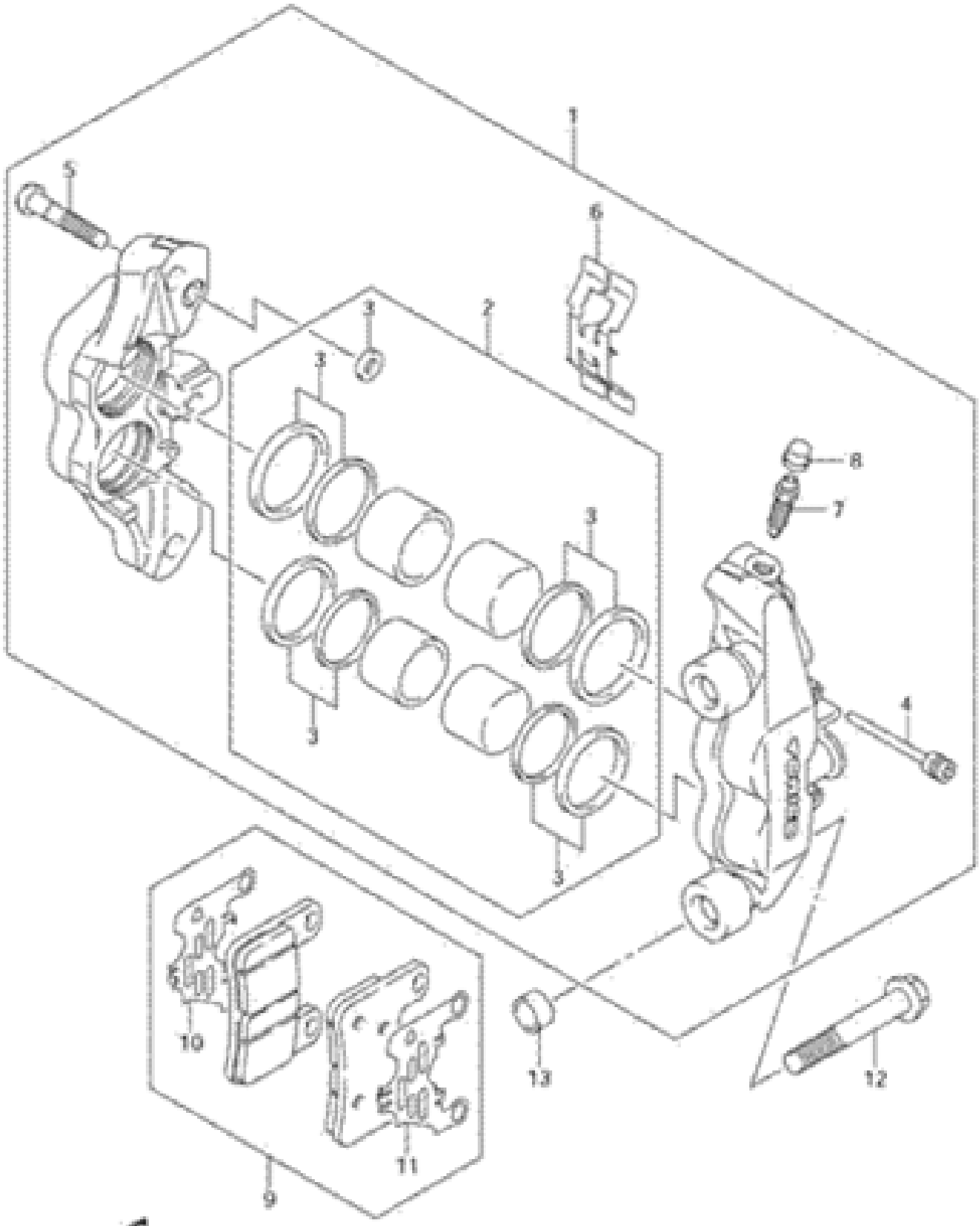

FIG.58

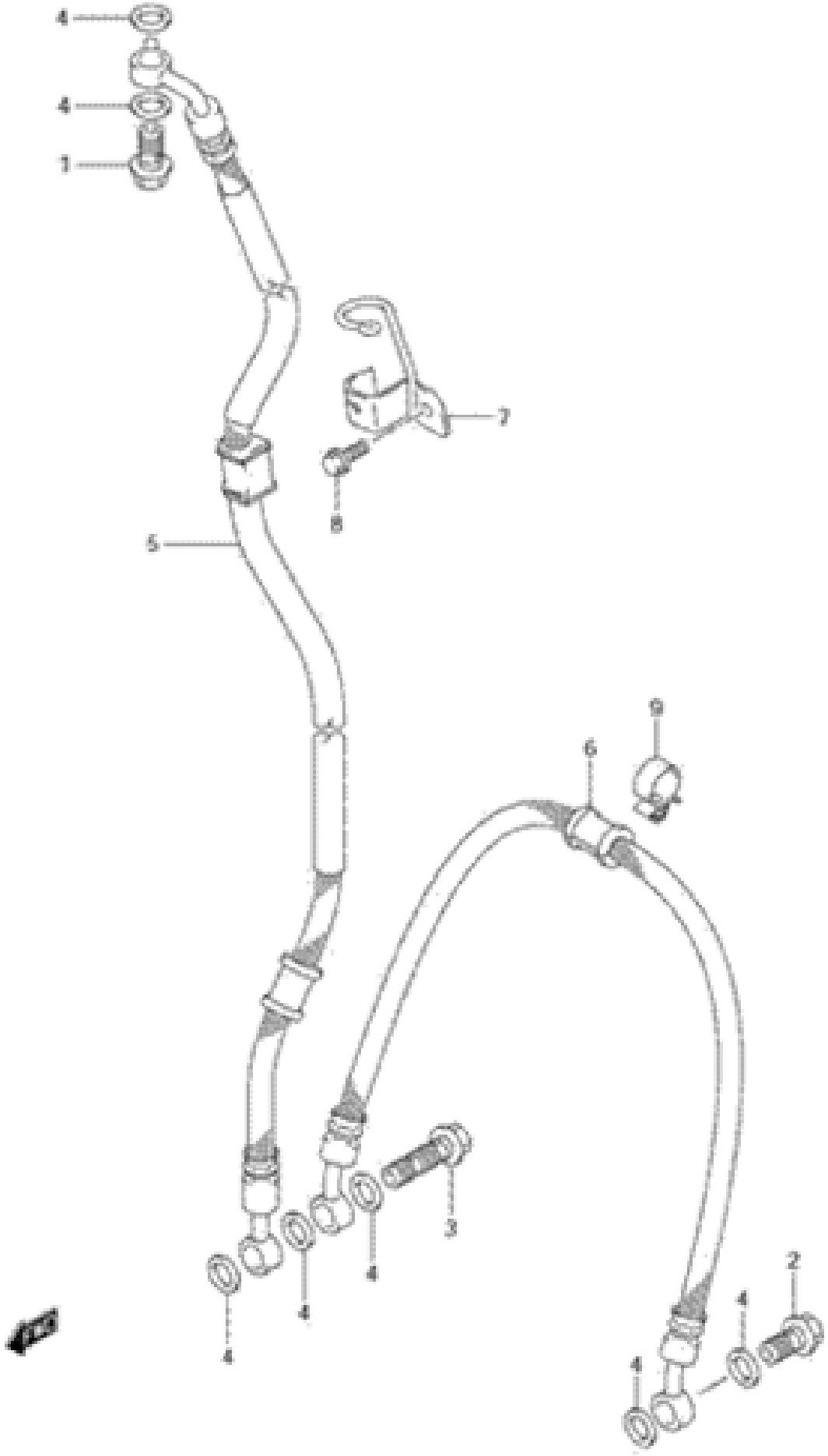

GSX-R600K6 E03 E28_058
FRONT BRAKE HOSE

FIG.59

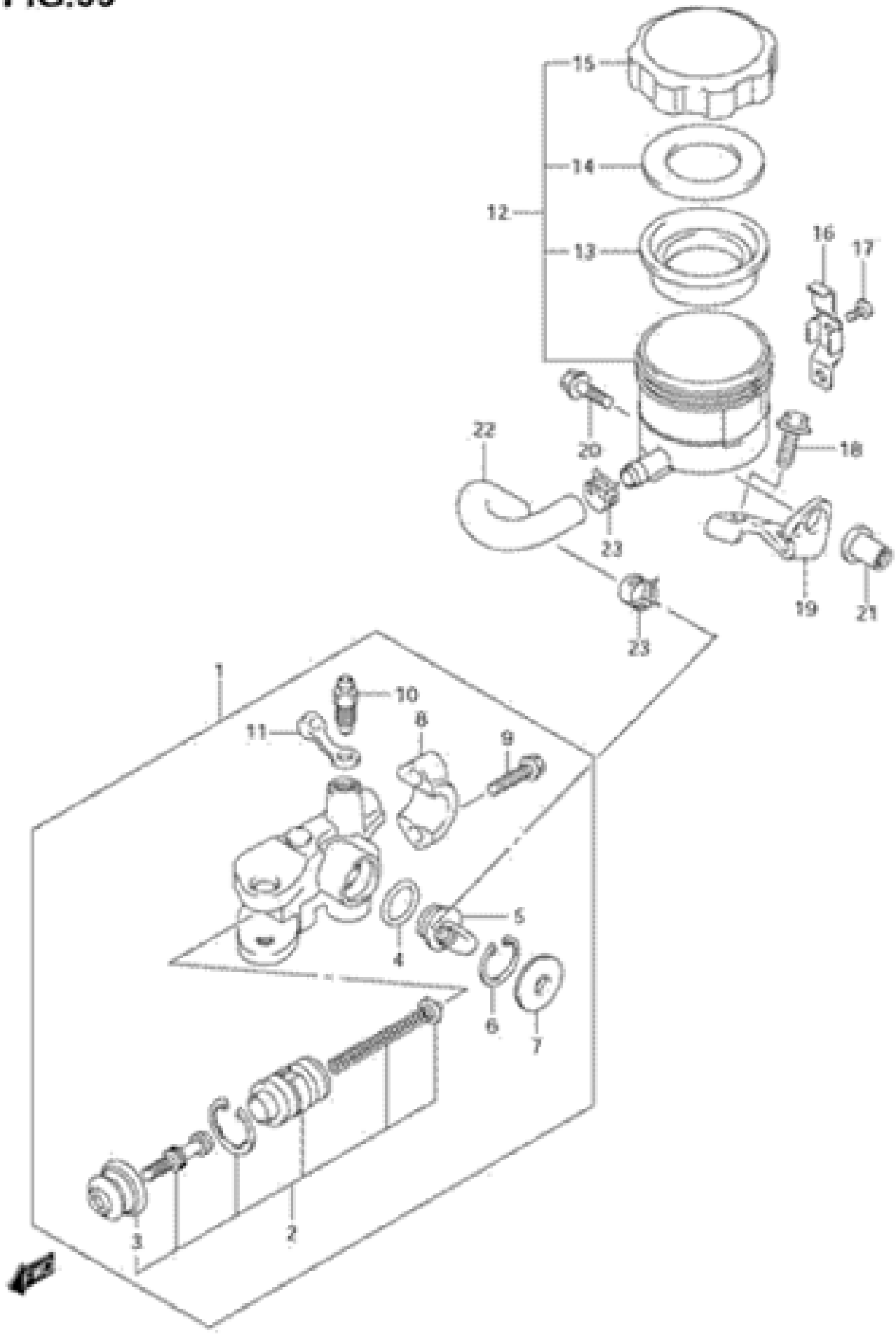

GSX-R600K6 E03 E28_059
FRONT MASTER CYLINDER