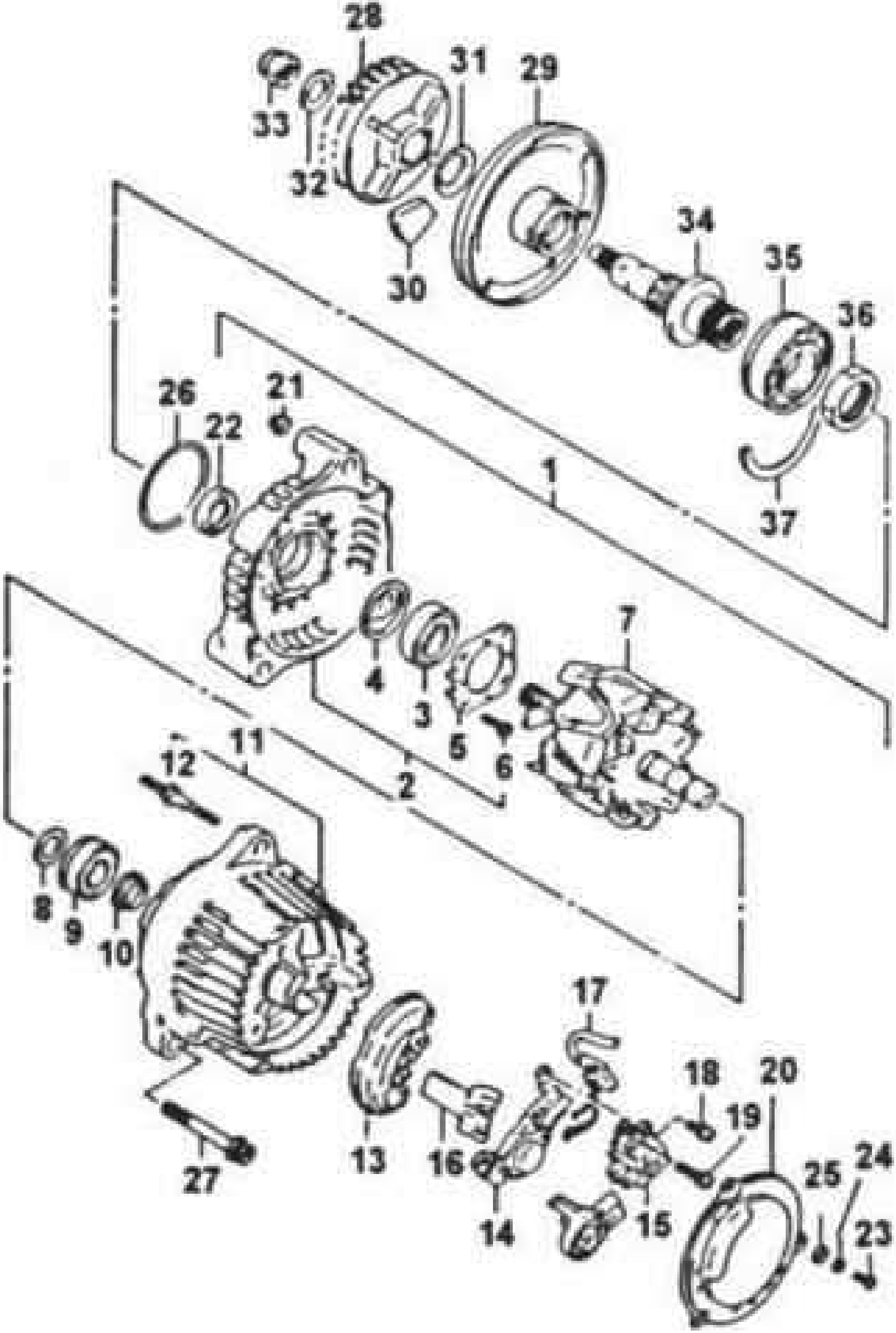
28
31
29
33
32
30
34
35
36
37
26
22
21
1
4
3
5
6
7
2
11
12
8
9
10
27
13
16
17
14
18
19
15
20
25
24
23

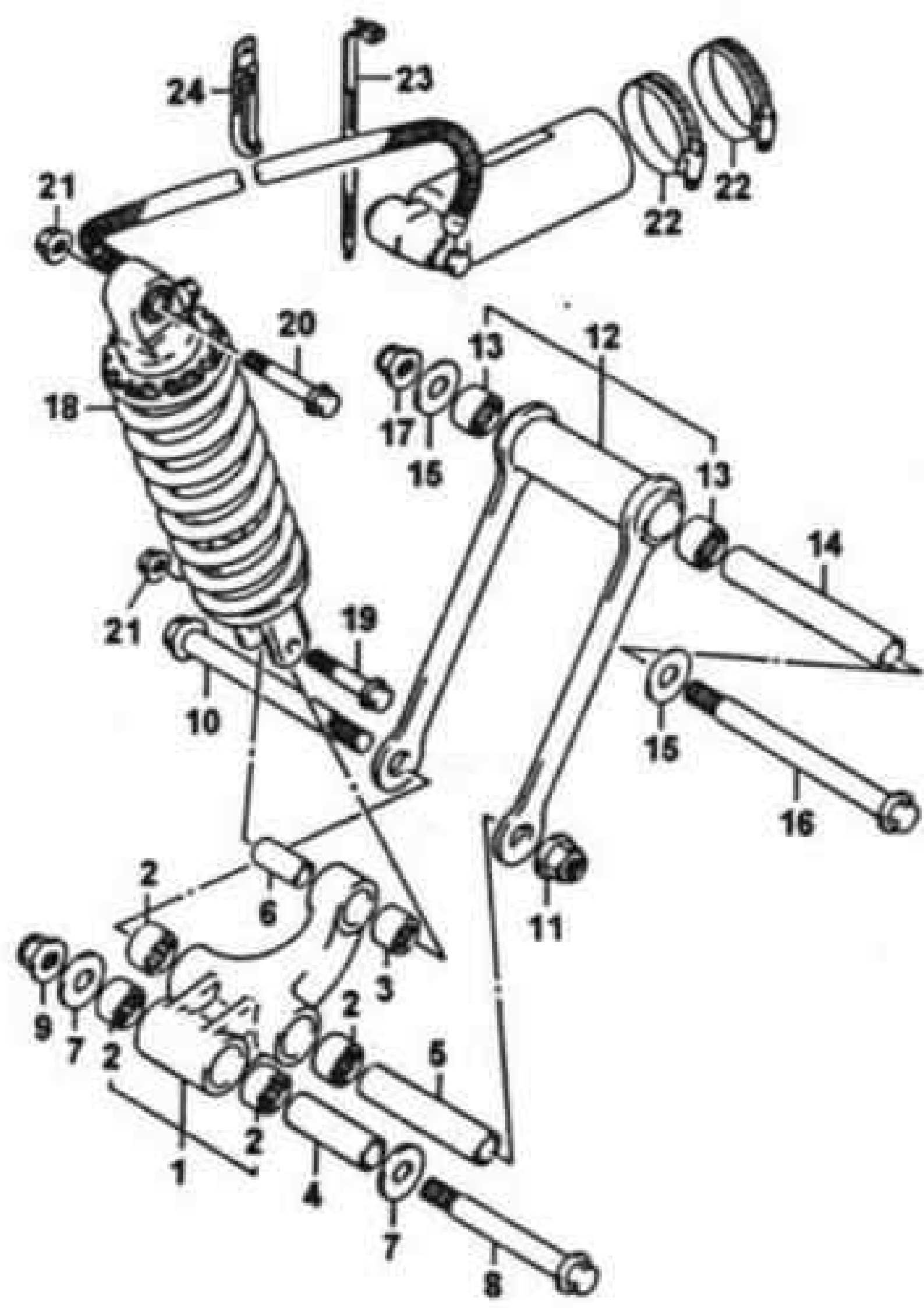
24
23
21
22
22
20
13
12
18
17
15
13
14
21
19
10
15
16
2
6
11
3
9
7
2
2
5
2
1
4
7
8

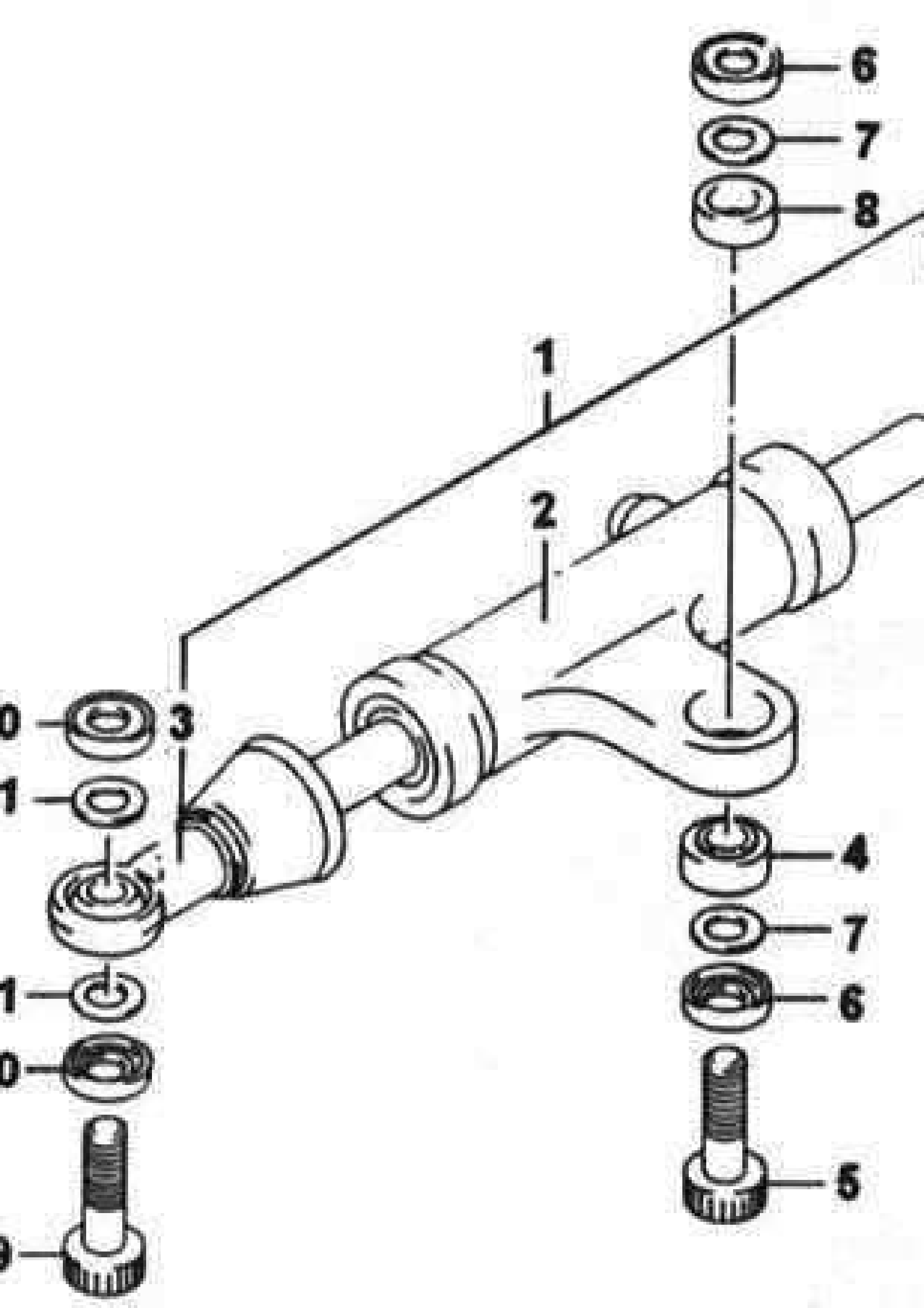
6
7
8
1
2
3
0
1
4
7
1
6
0
5
9

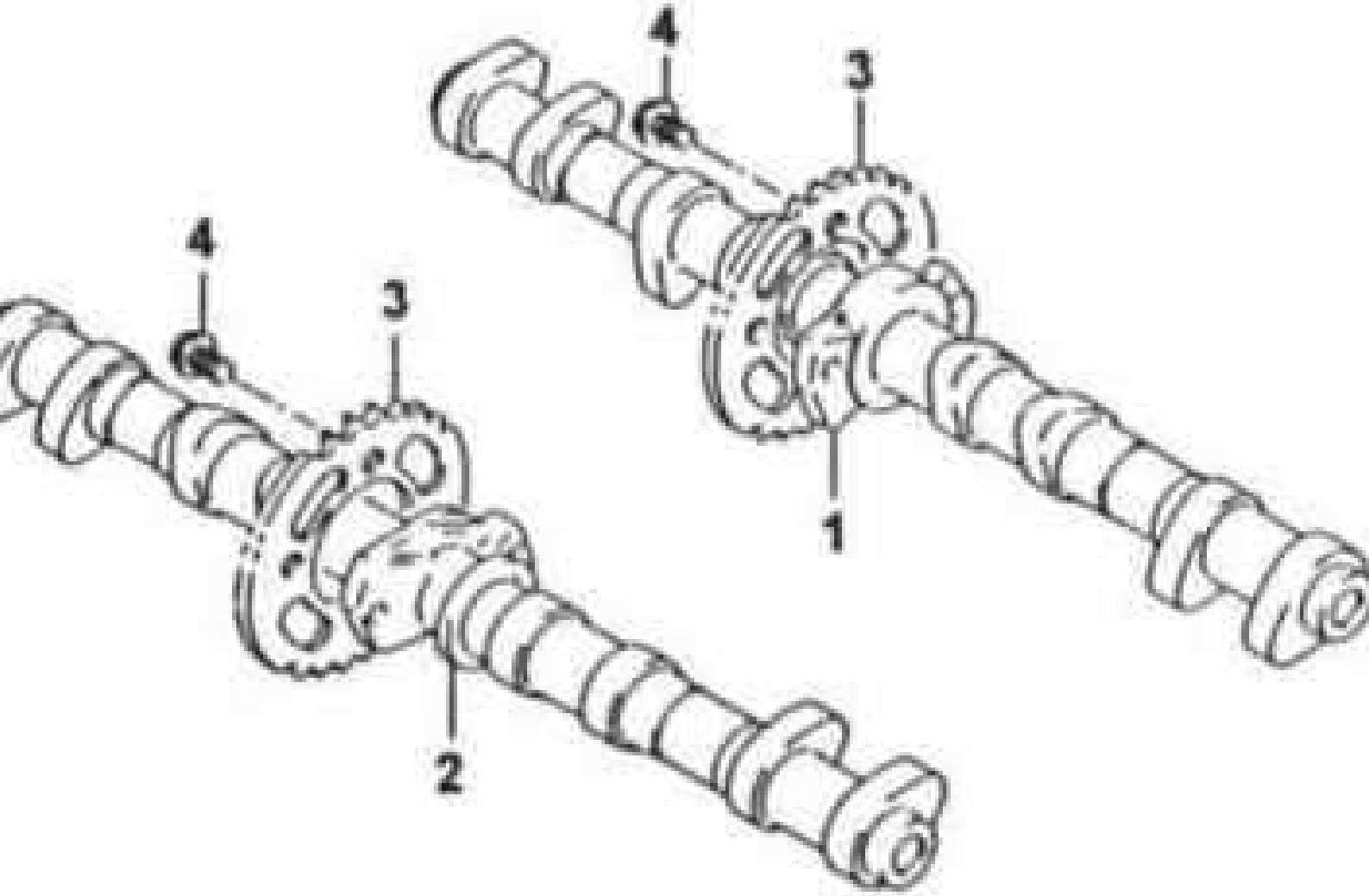
4
3
4
3
1
2

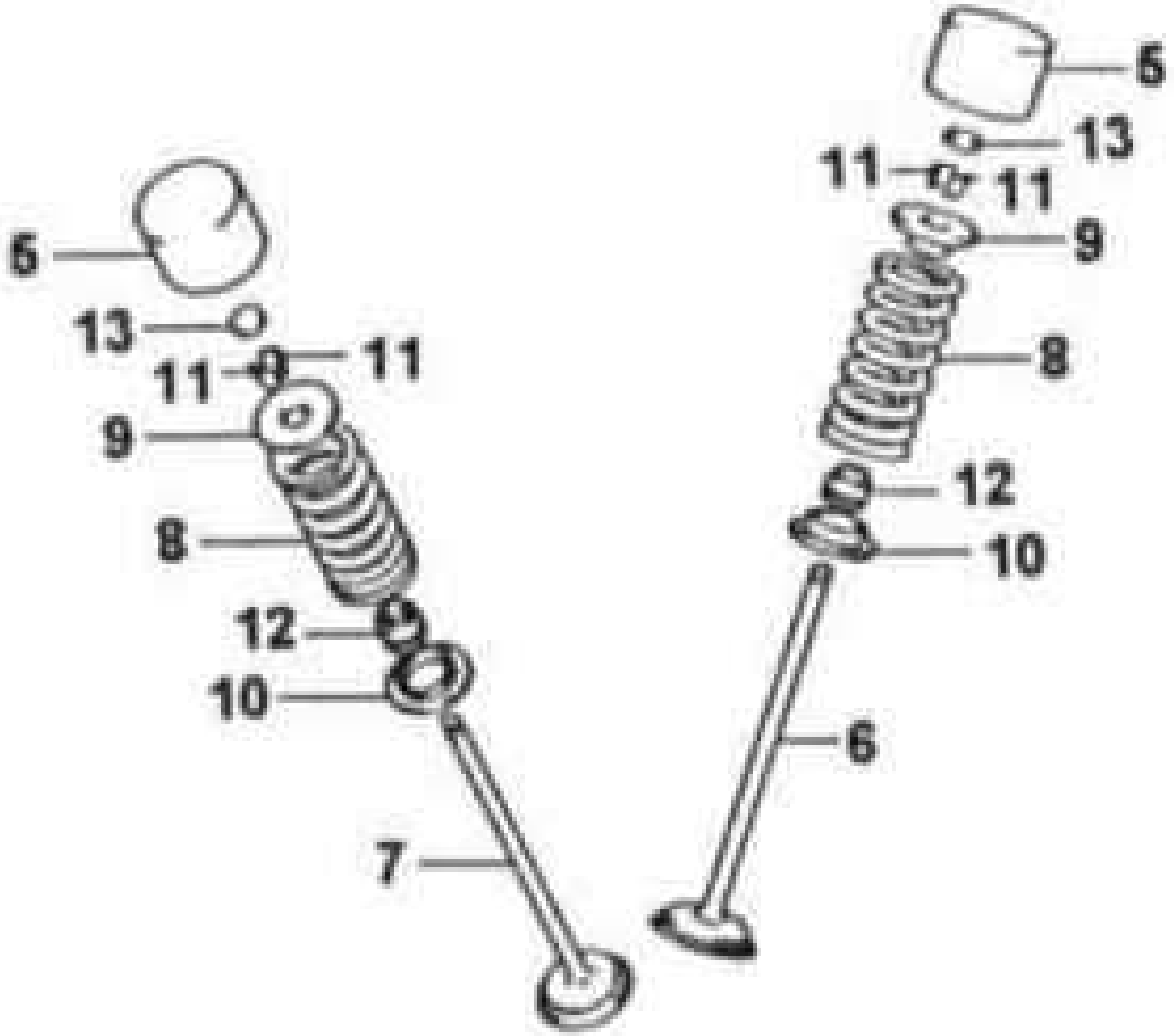
5
13
11
11
9
8
12
10
6
5
13
11
11
9
8
12
10
7

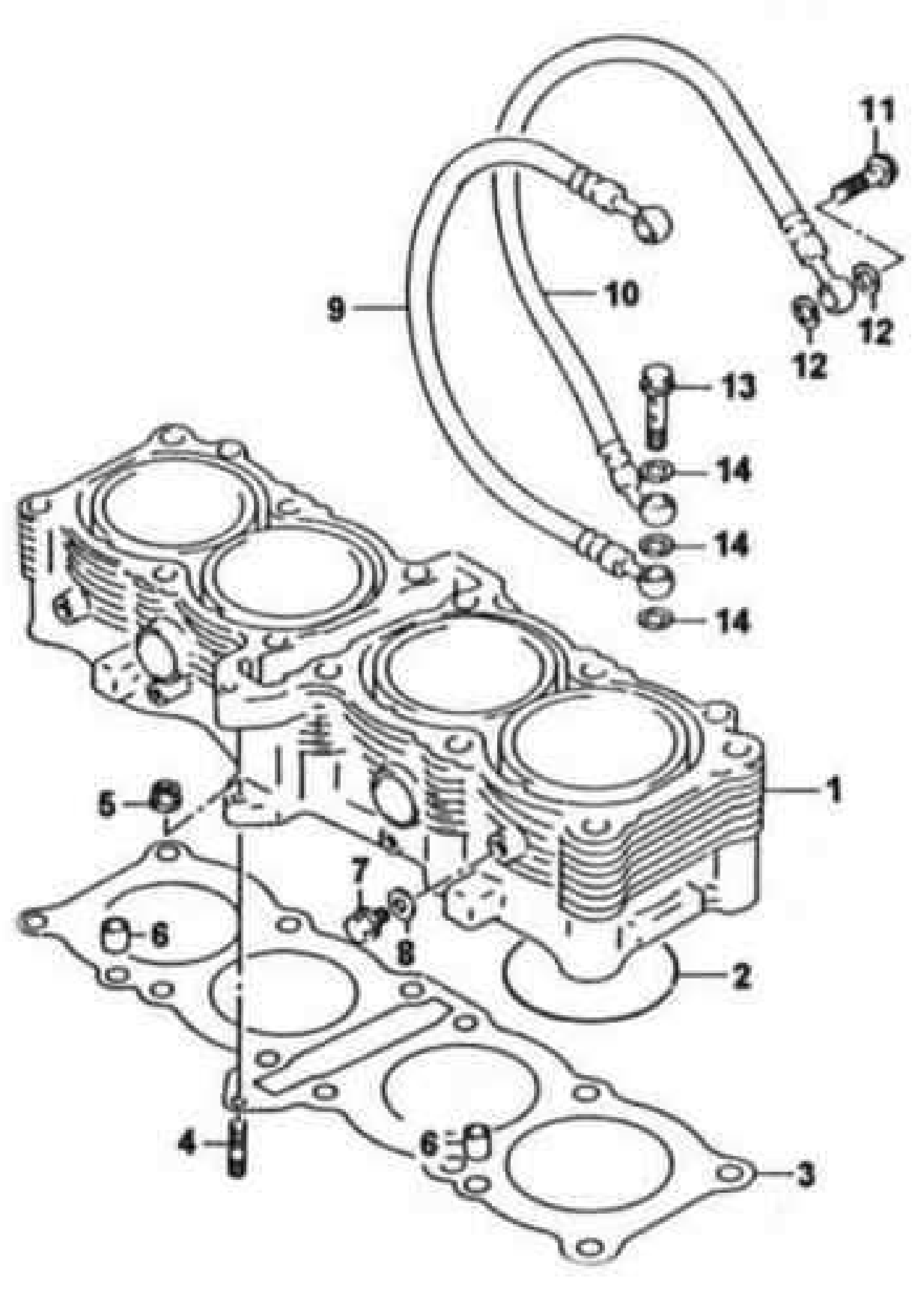
11
10
9
12
12
13
14
14
14
1
5
7
6
8
2
4
6
3

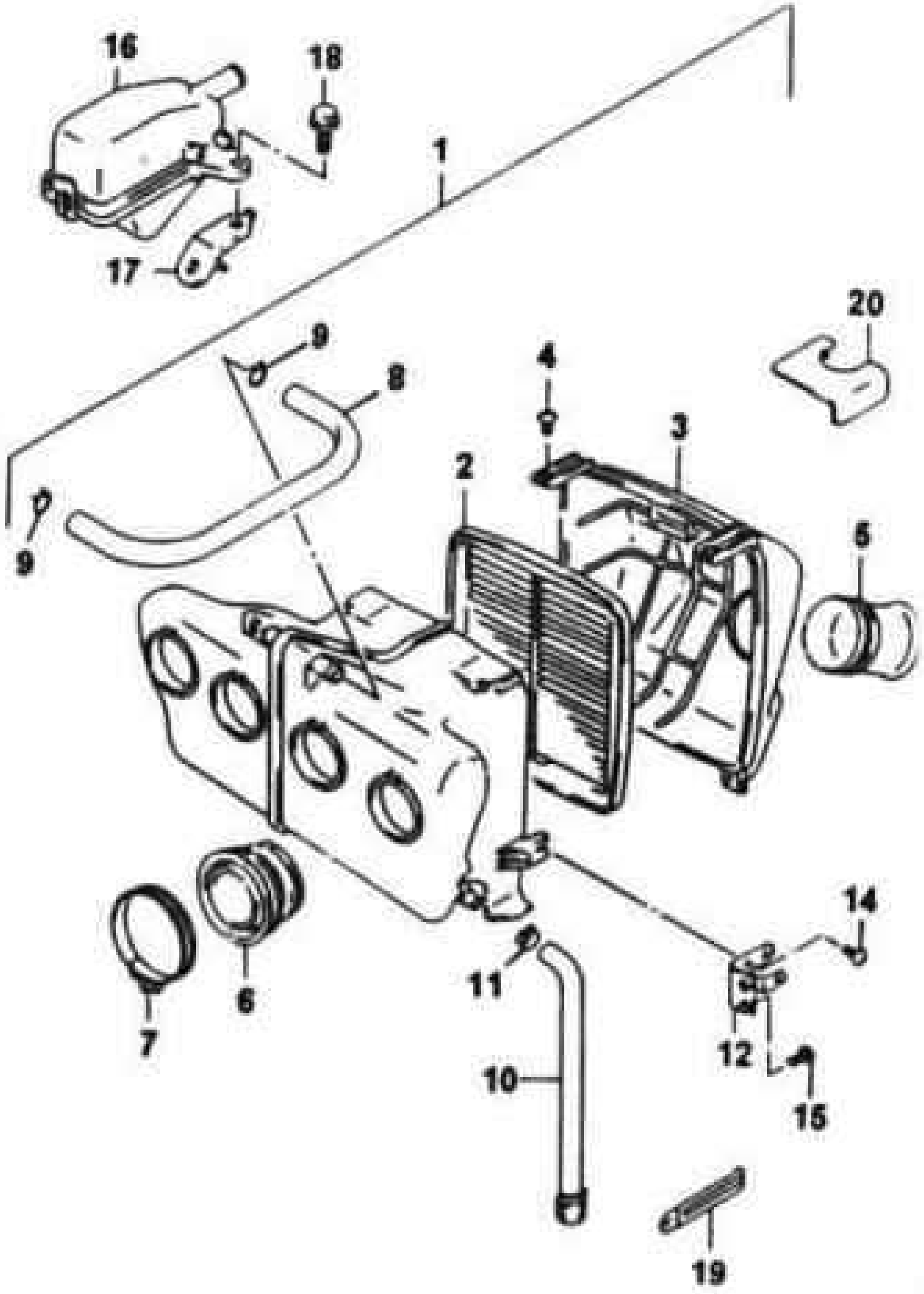
16
18
1
17
20
9
4
8
3
2
9
5
14
11
6
7
12
10
15
19

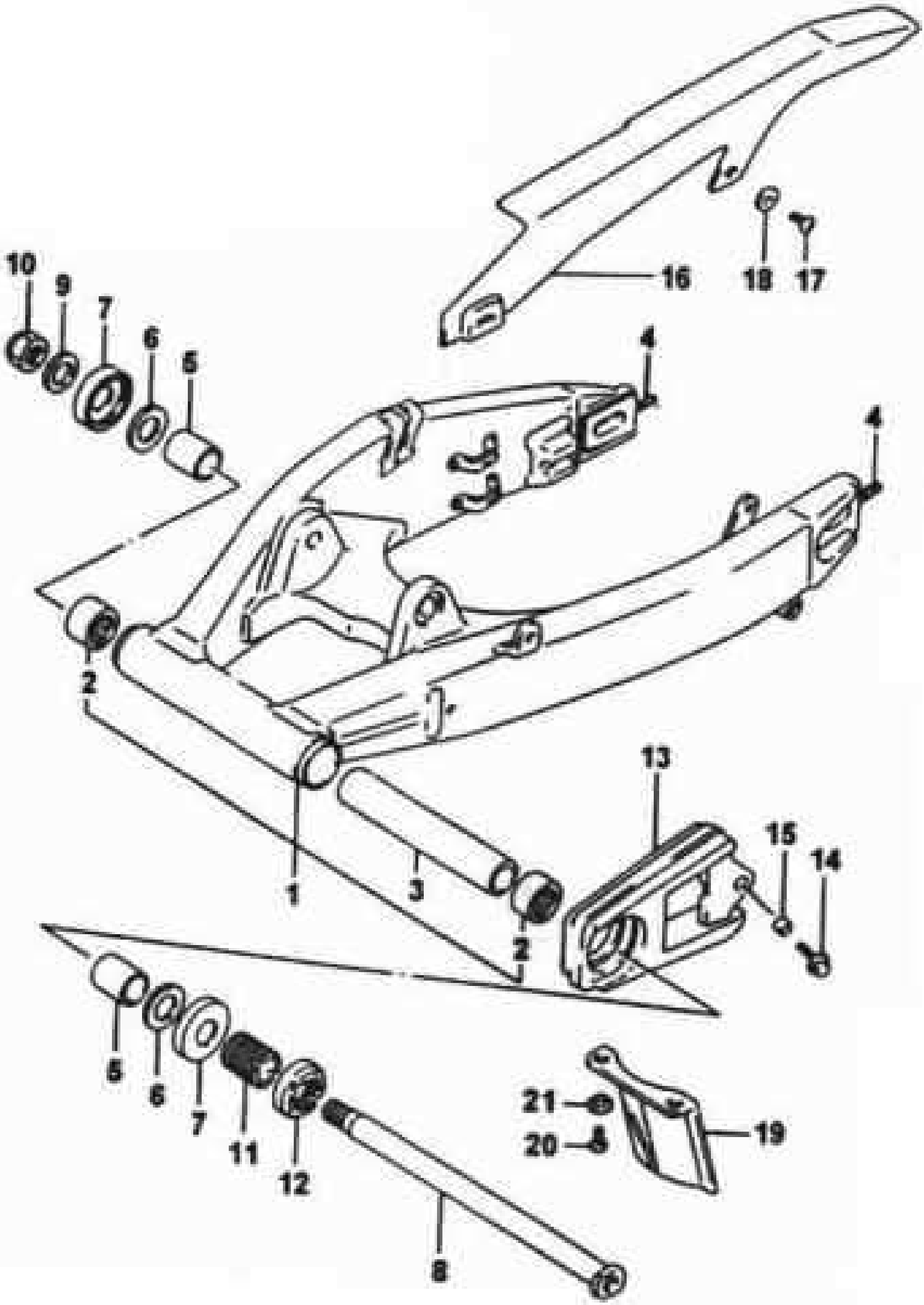
10
9
7
6
5
16
18
17
4
4
2
1
3
2
13
15
14
5
6
7
11
12
8
21
20
19

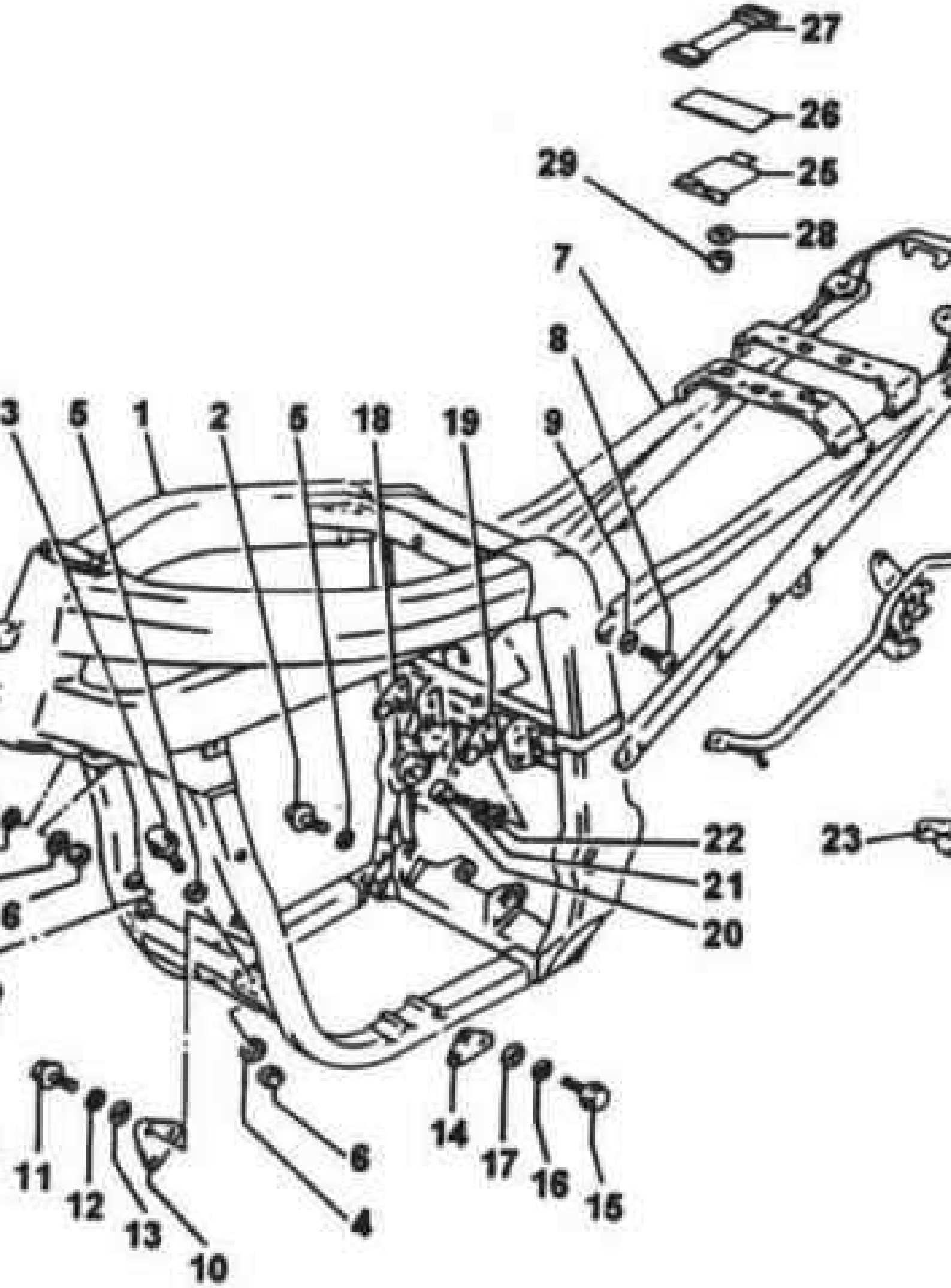
27
26
25
29
28
7
8
3
5
1
2
5
18
19
9
22
23
21
20
6
11
12
13
10
4
6
14
17
16
15

1
2
3
4
5

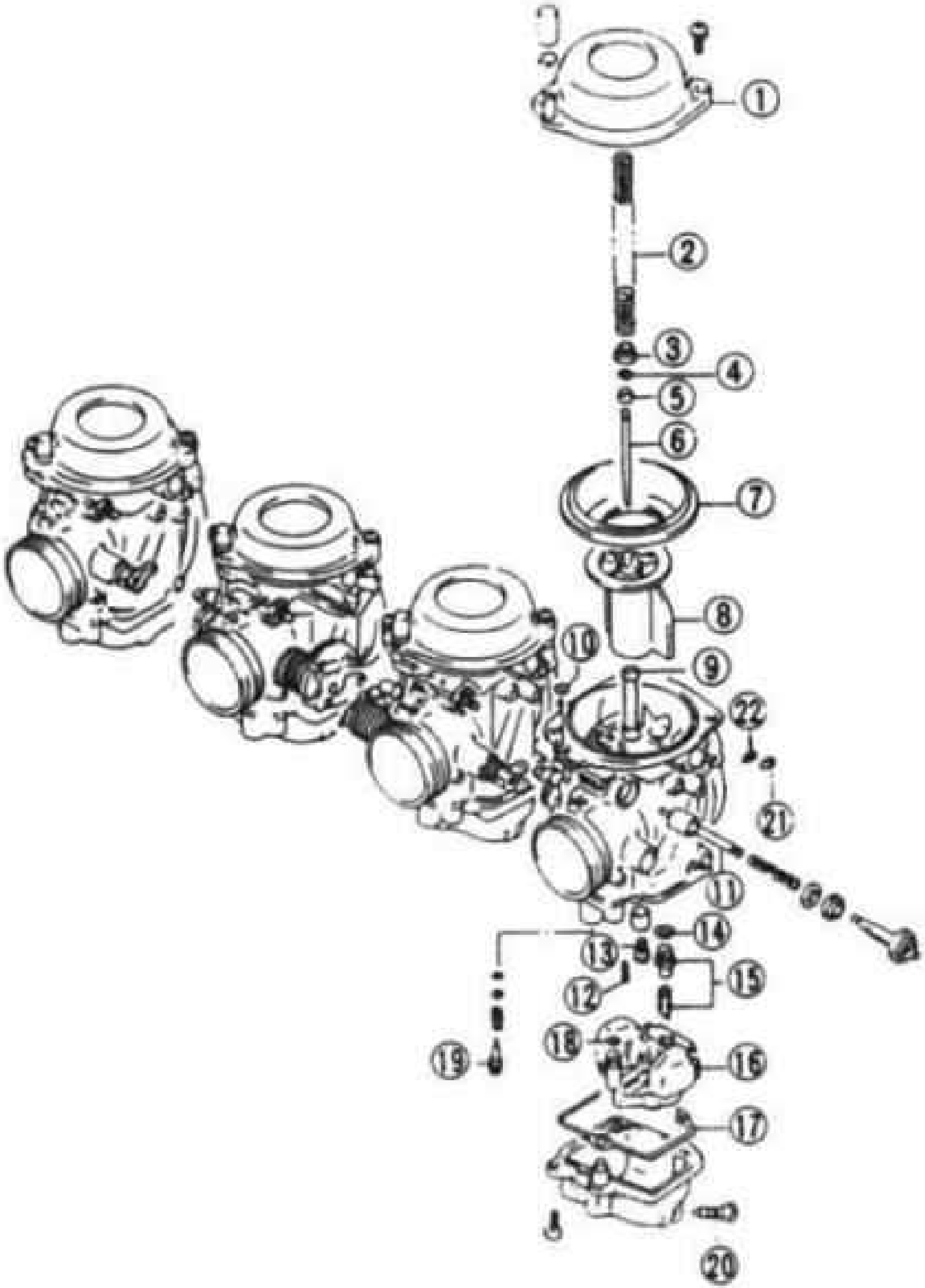
1
2
3
4
5
6
7
8
9
10
11
12
13
14
15
16
17
18
19
20
21
22

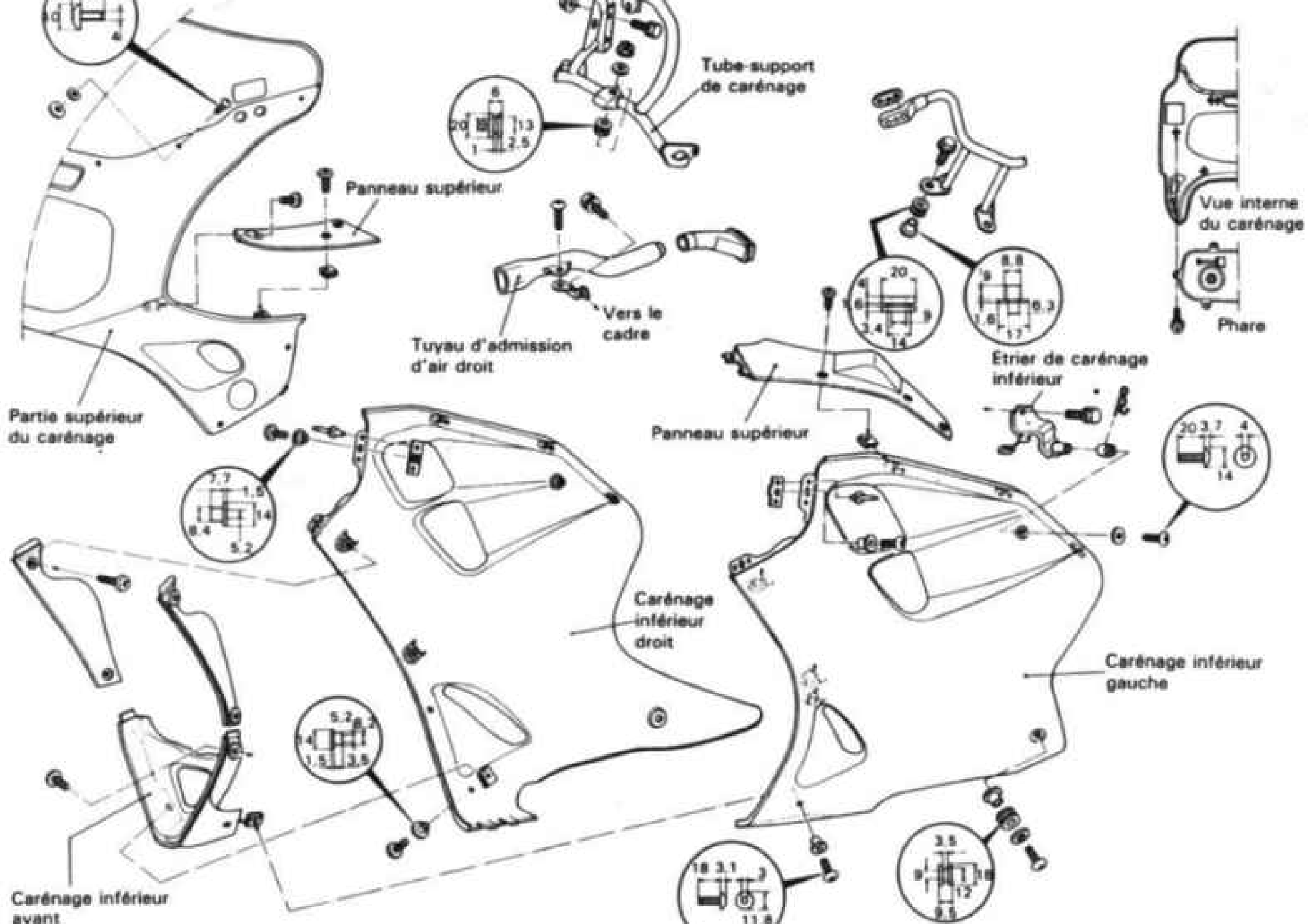
Tube-support de carénage
Panneau supérieur
Vue interne du carénage
Vers le cadre
Tuyau d'admission d'air droit
Phare
Étrier de carénage inférieur
Partie supérieur du carénage
Panneau supérieur
Carénage inférieur droit
Carénage inférieur gauche
Carénage inférieur avant

A

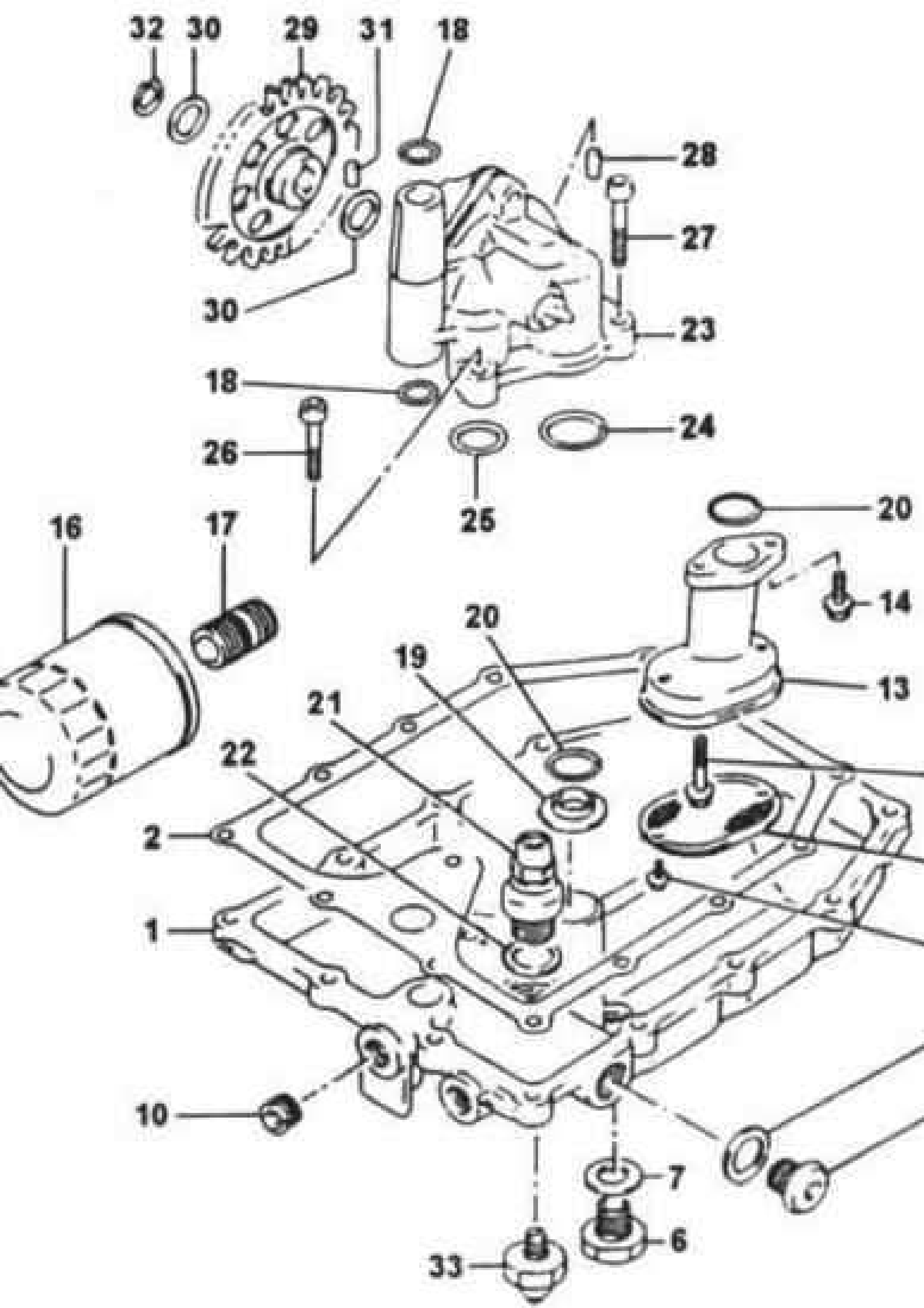
32
30
29
31
18
28
27
30
23
18
24
26
25
20
16
17
14
20
19
13
21
22
2
1
10
7
6
33

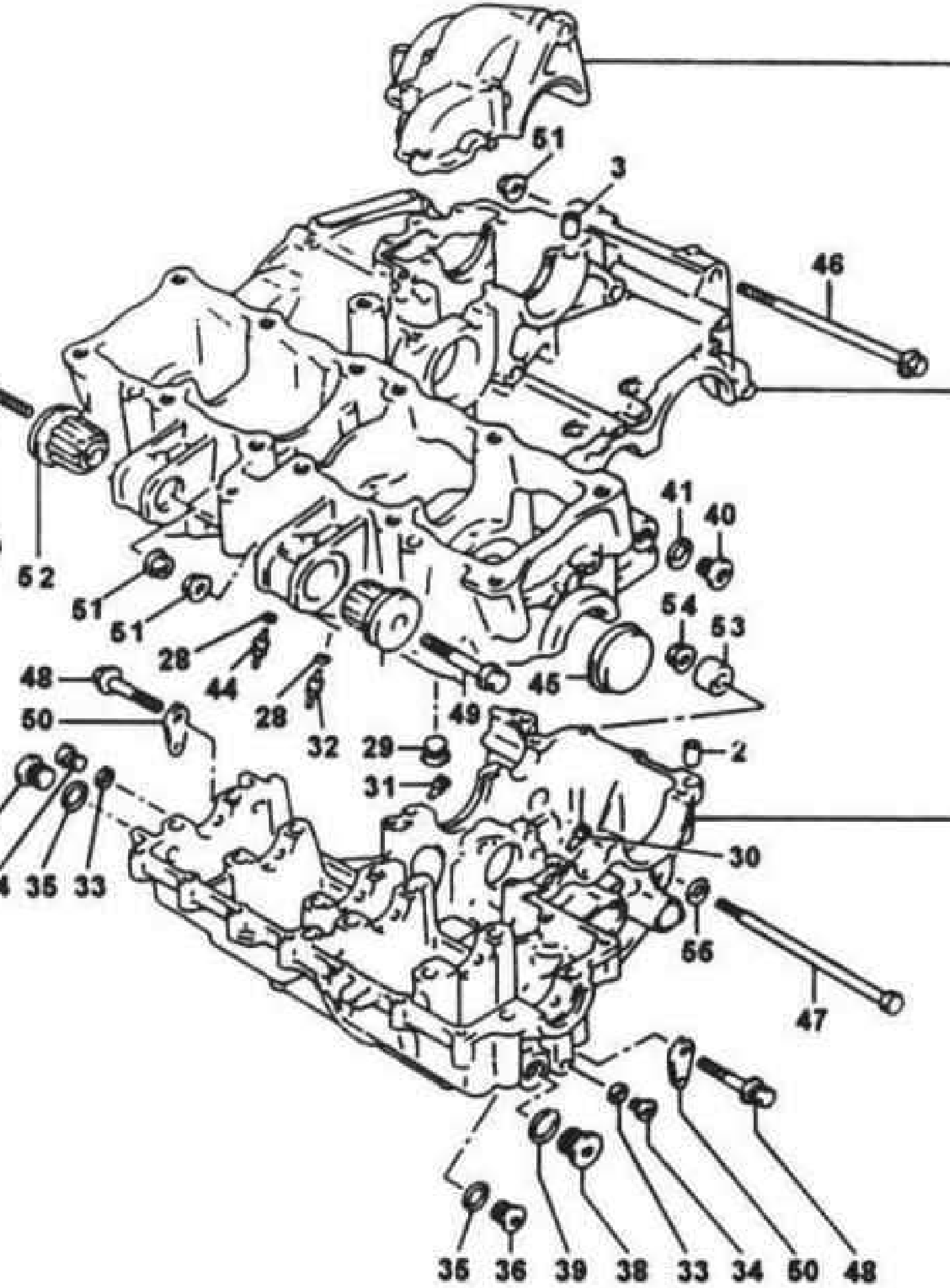
51
3
46
52
51
51
28
44
28
32
48
50
29
31
49
45
41
40
54
53
2
30
56
47
4
35
33
35
36
39
38
33
34
50
48

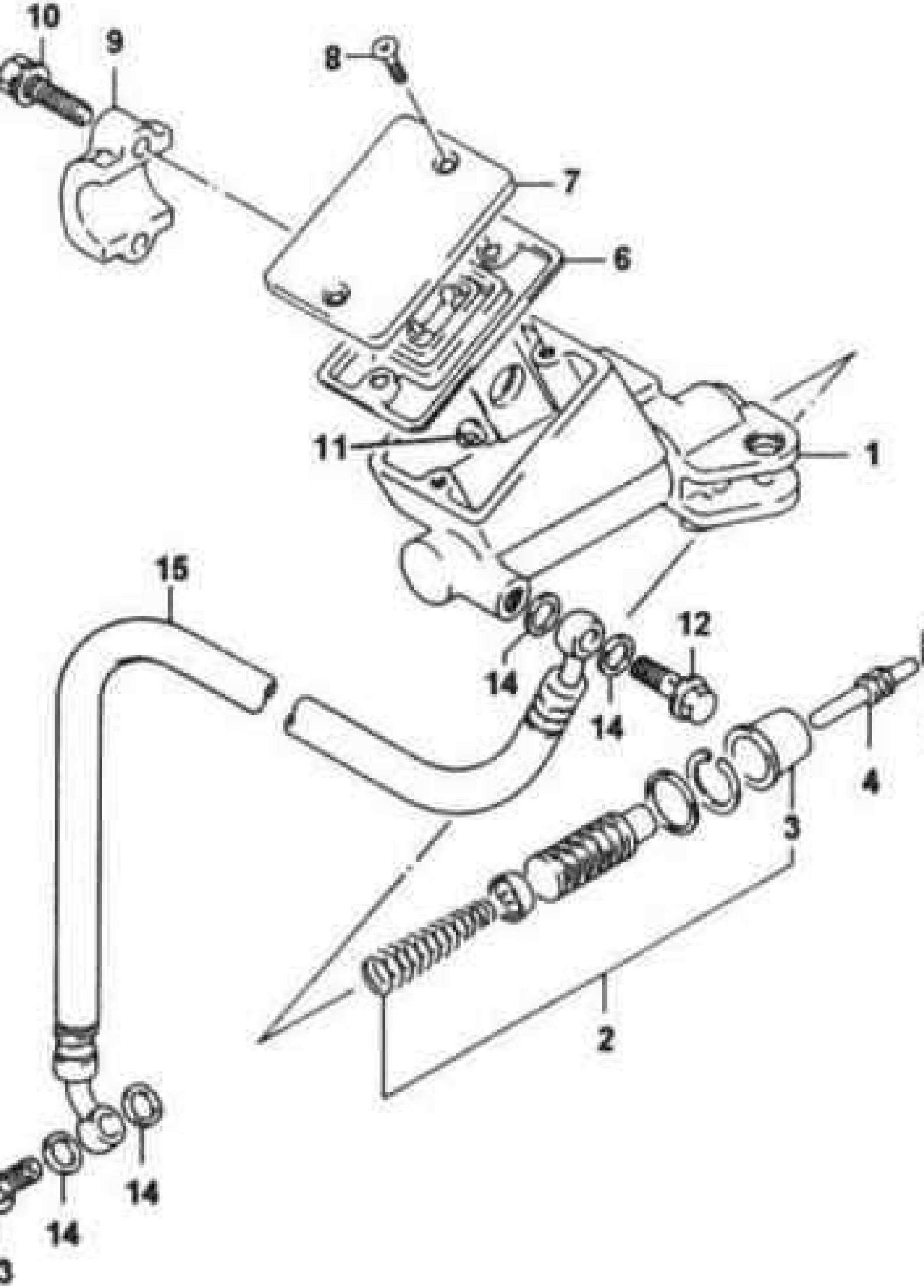
10
9
8
7
6
11
1
15
12
14
14
4
3
2
14
14
3

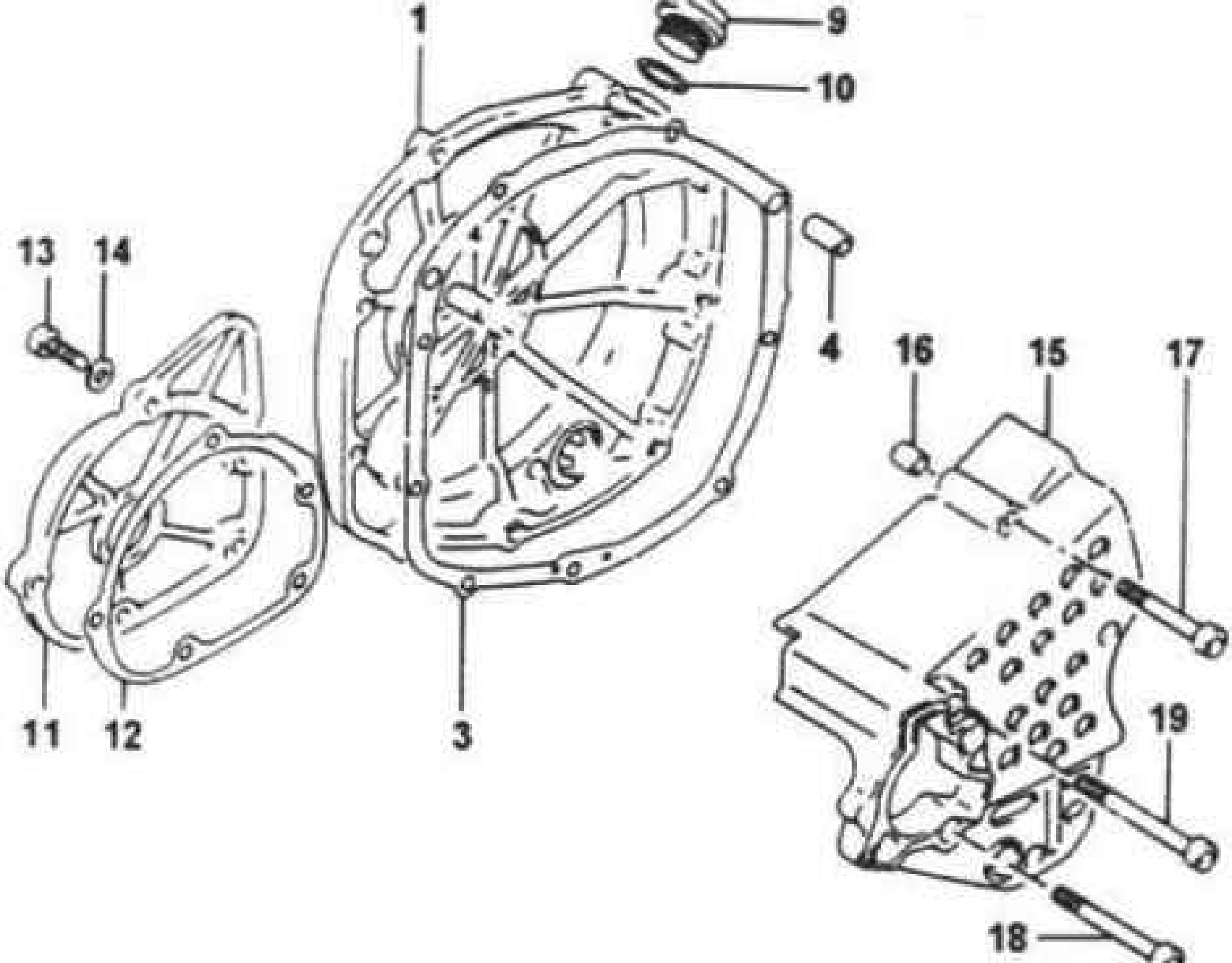
1
9
10
13
14
4
16
15
17
11
12
3
19
18

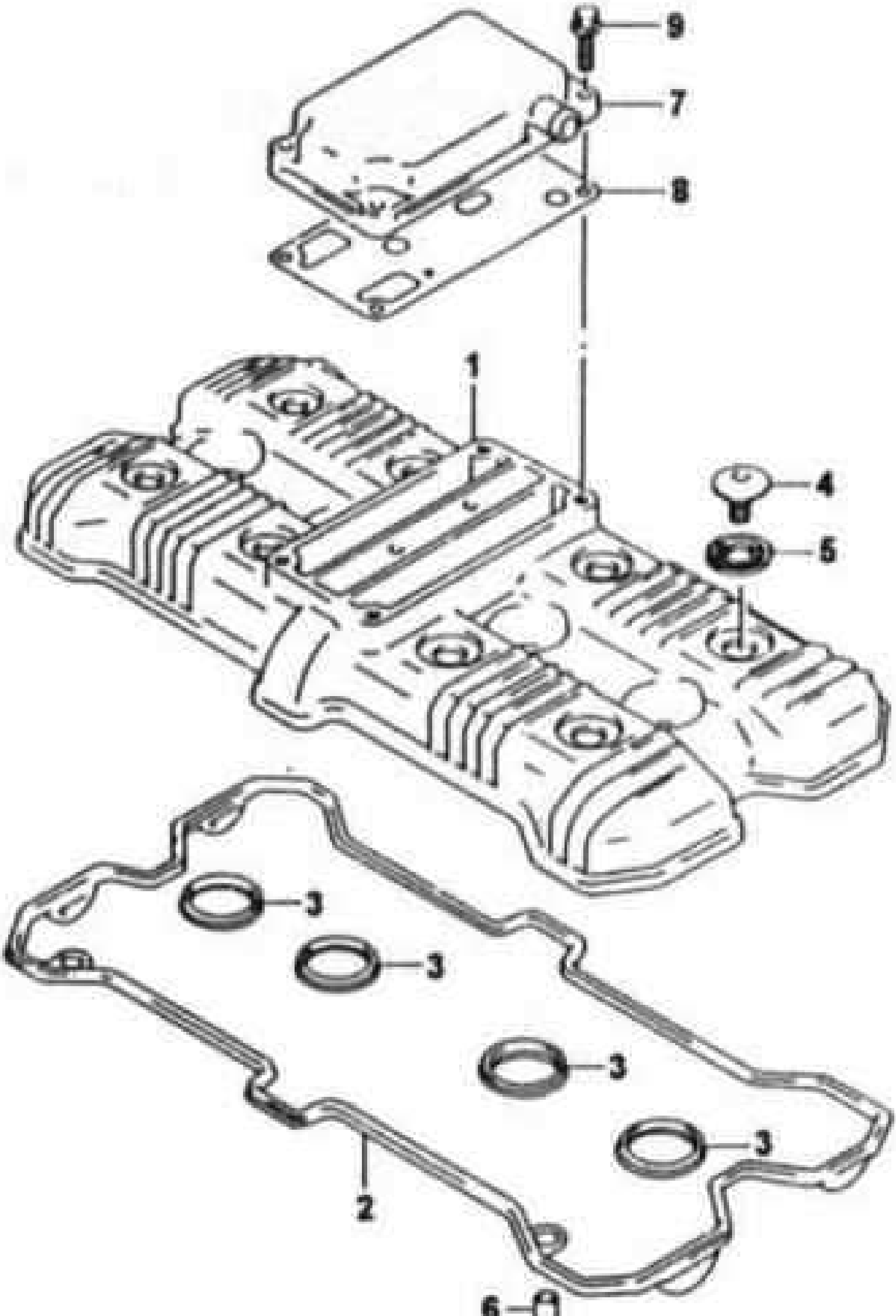
9
7
8
1
4
5
3
3
3
3
2
6

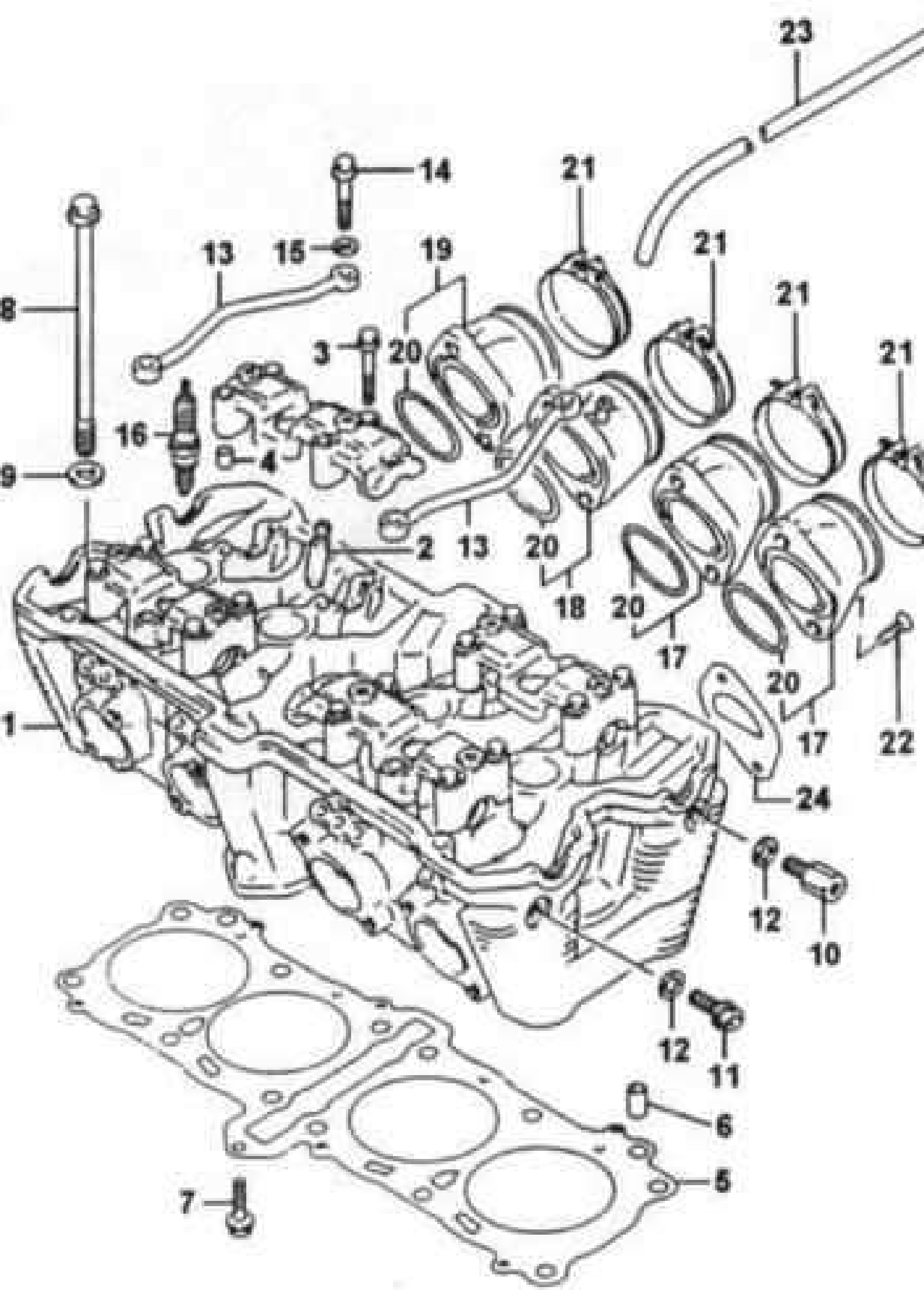
23
14
21
13
15
19
21
8
3
20
21
21
16
4
9
2
13
20
18
20
17
20
1
17
22
24
12
10
12
11
6
5
7

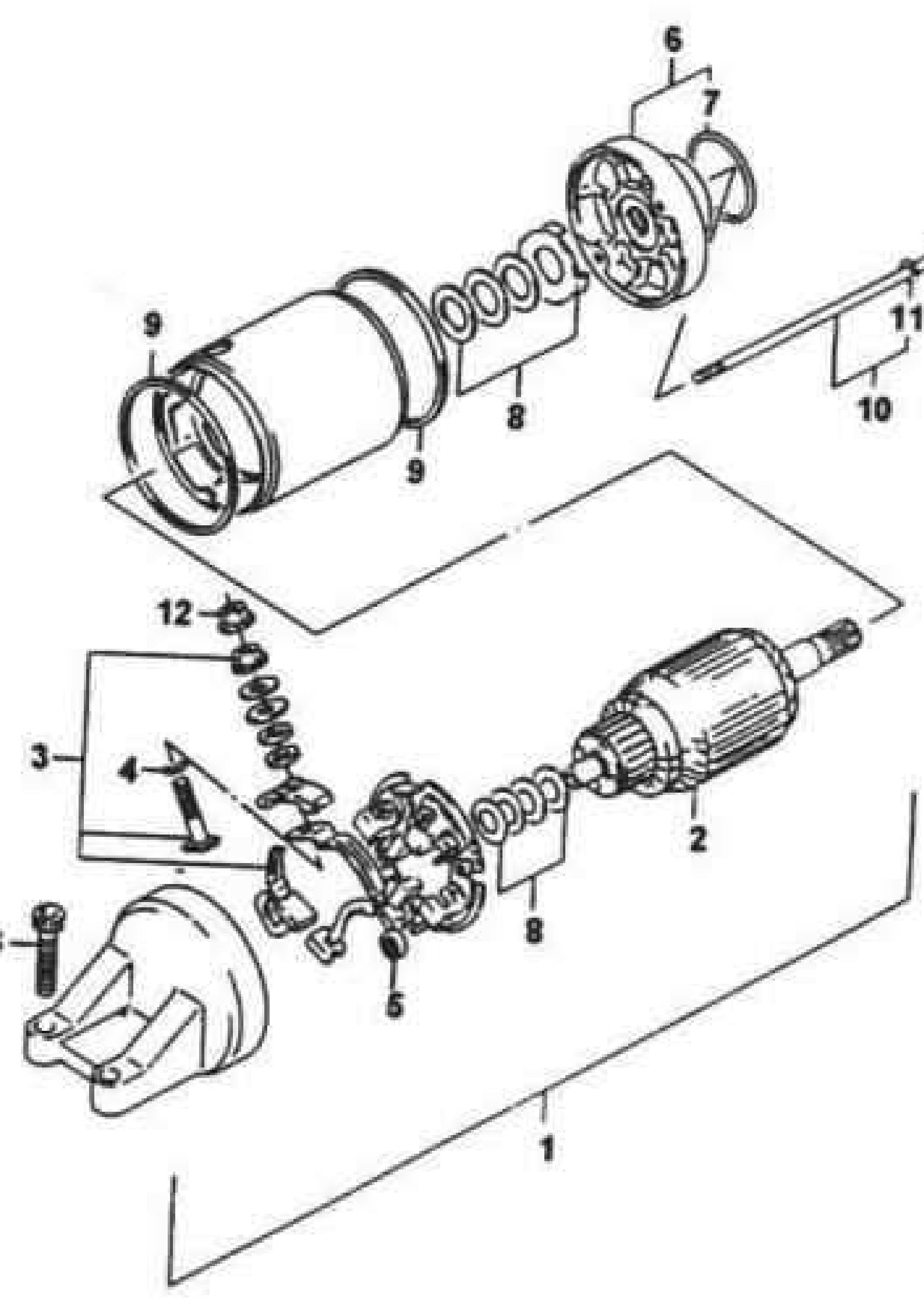
6
7
9
11
8
10
9
12
3
4
2
8
5
1

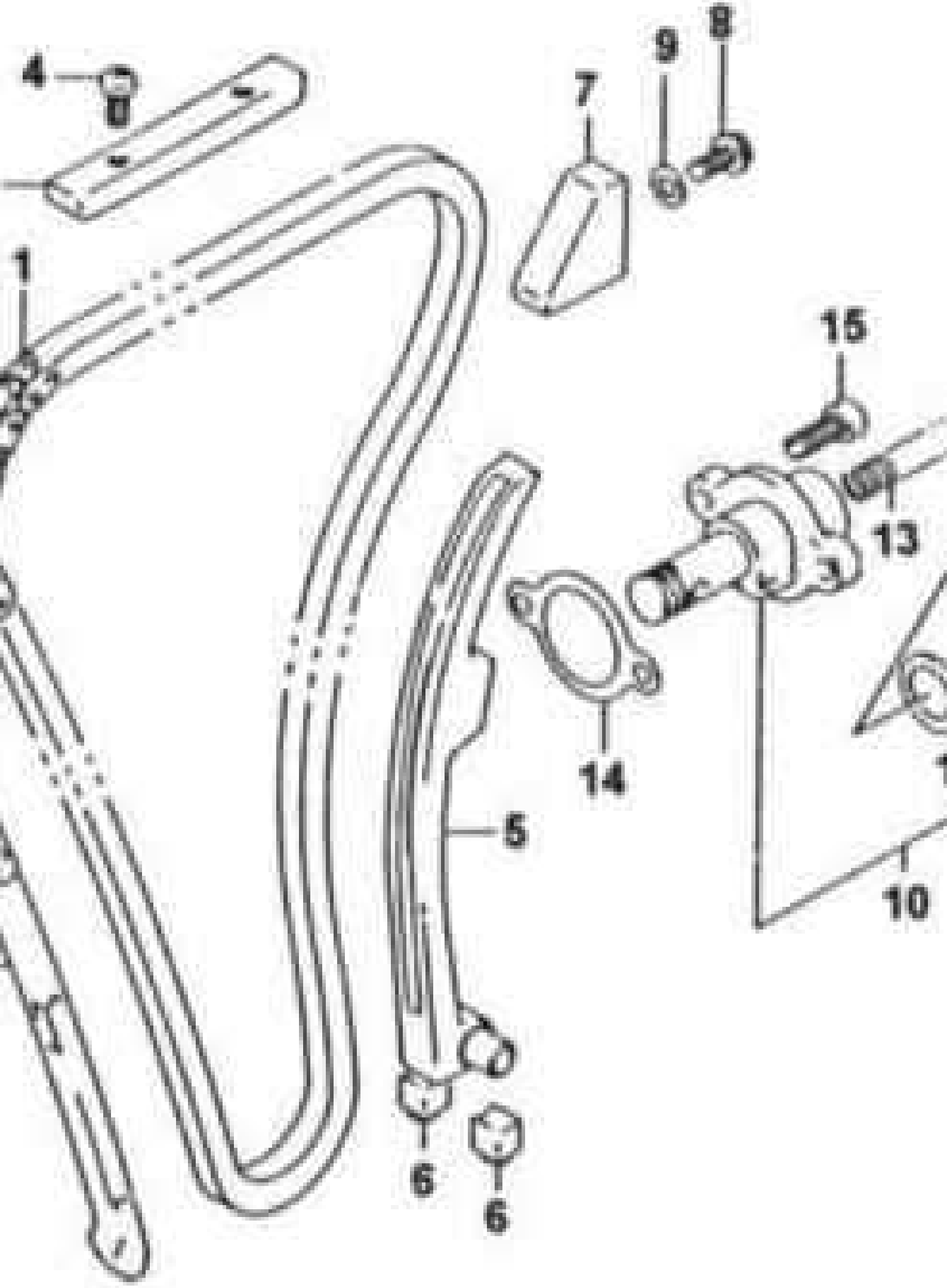
4
1
7
9
8
15
13
14
5
10
6
6

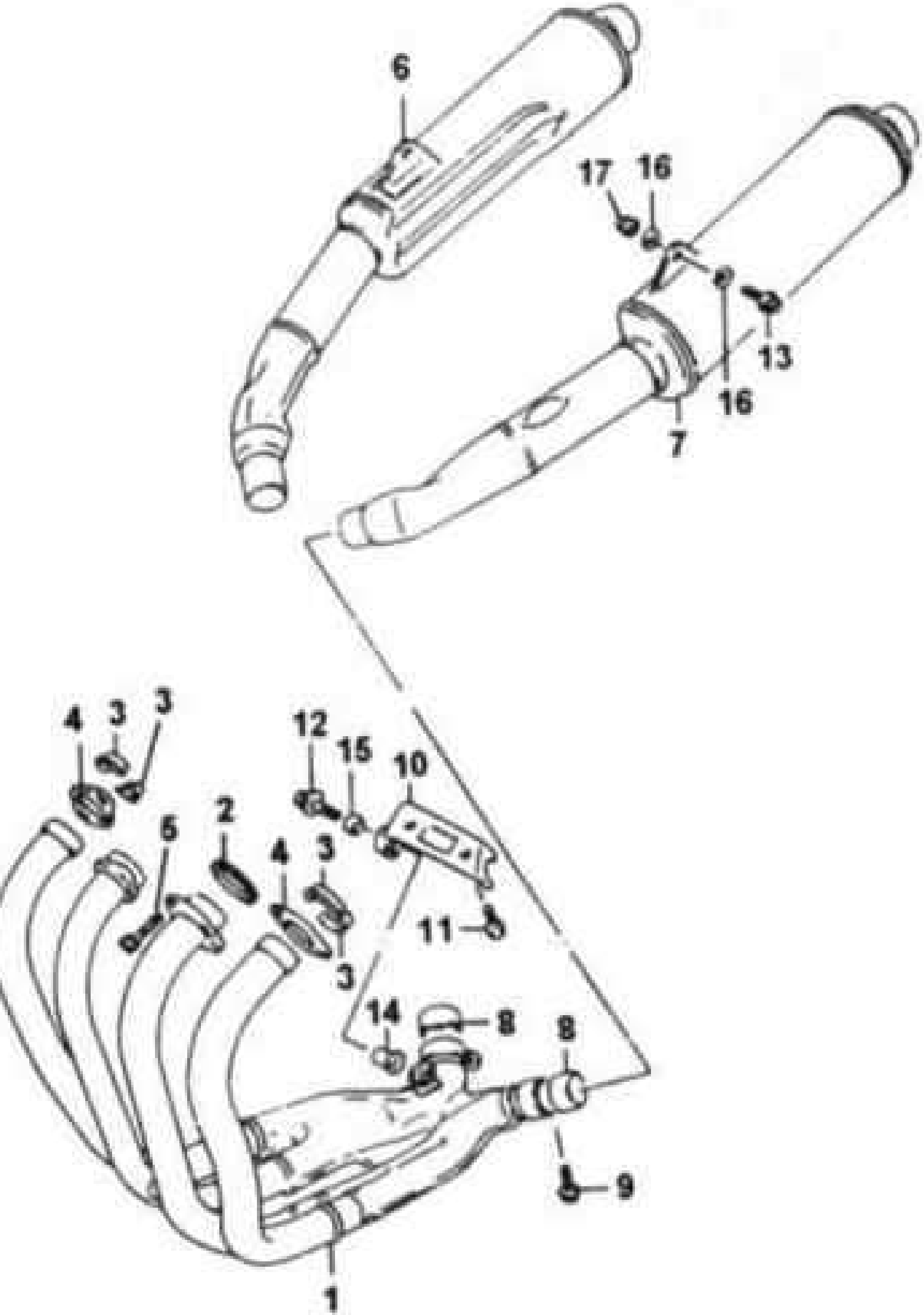
6
17
16
13
16
7
4
3
3
12
15
10
2
5
4
3
11
3
14
8
8
9
1

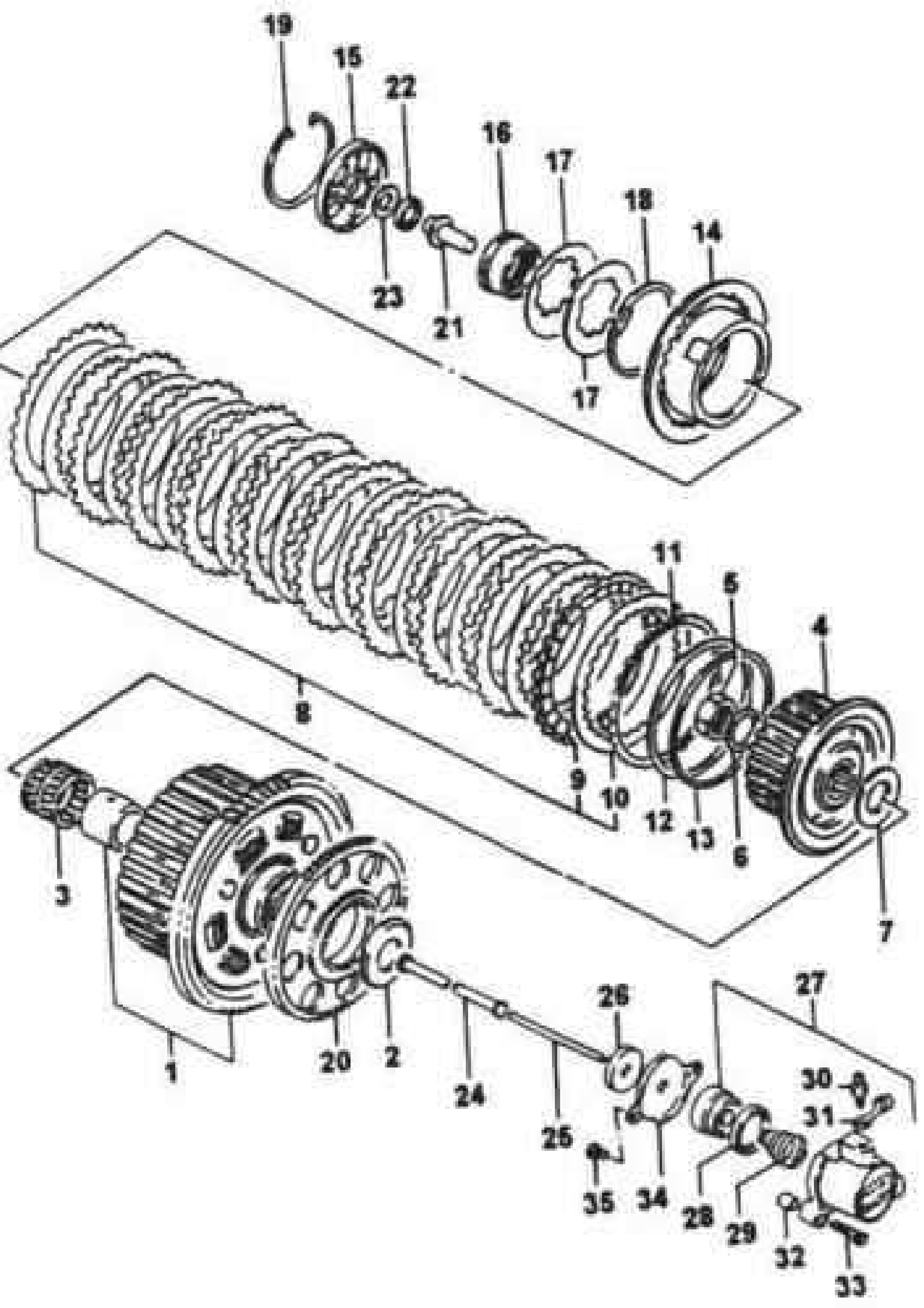
19
15
22
16
17
18
14
23
21
17
11
5
4
8
9
10
12
13
6
3
7
1
20
2
24
26
27
30
31
25
35
34
28
29
32
33

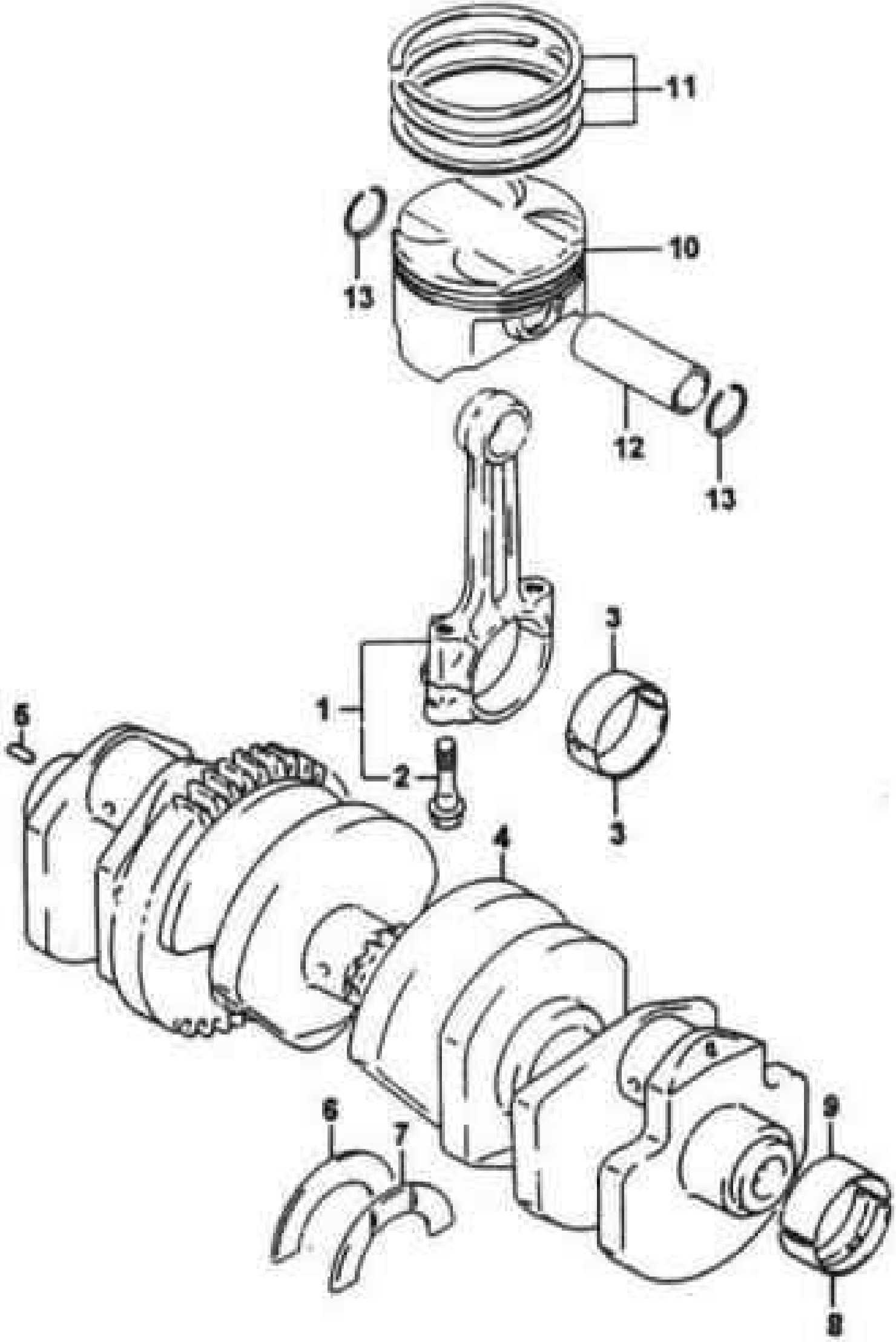
11
10
13
12
13
3
1
5
2
3
4
6
7
9
8

12
11
4
2
3
13
1
5
5
14
3
2
11
12
9
15
9
8
7
7
8

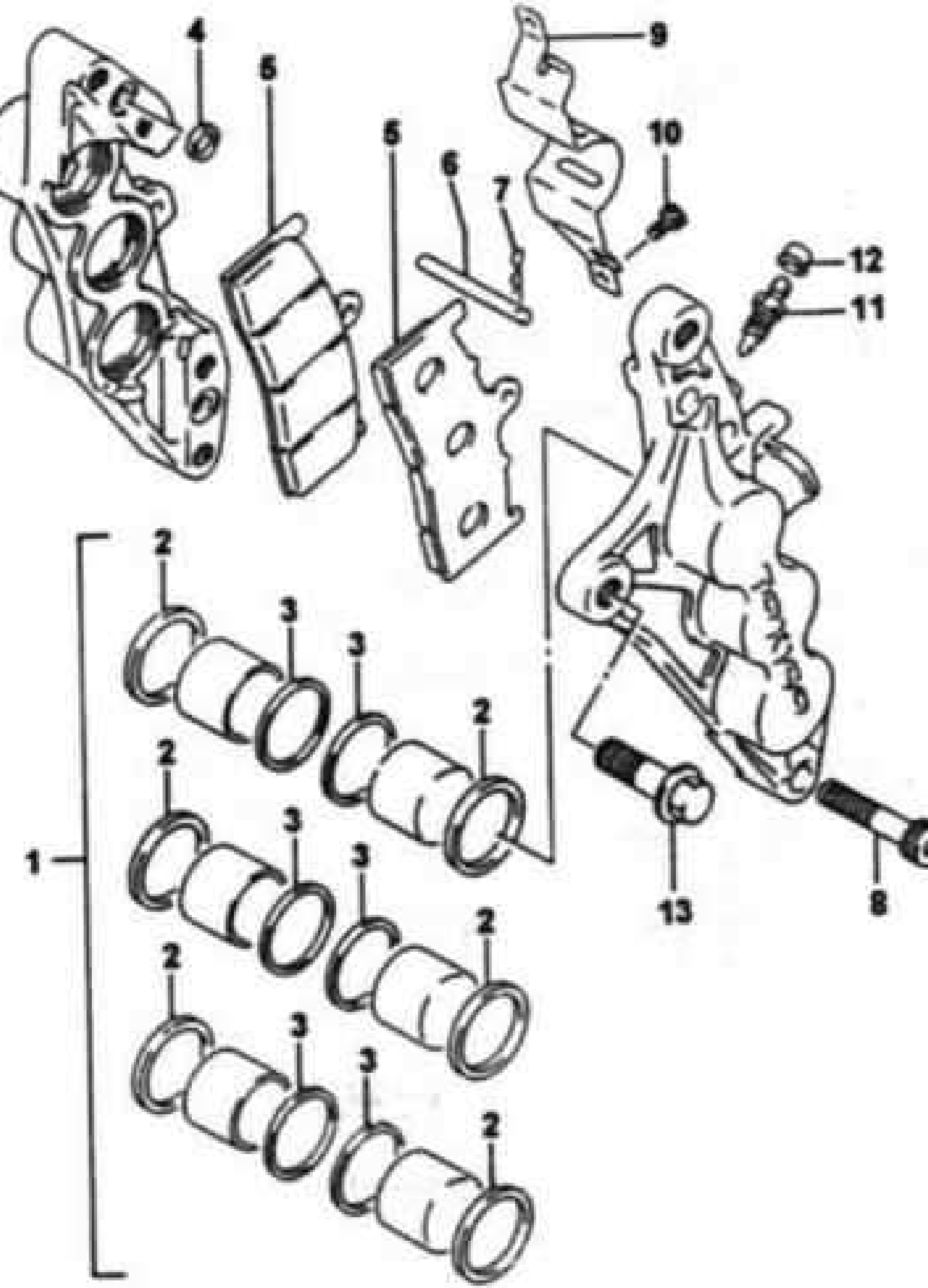
4
5
5
6
7
9
10
12
11
2
3
3
2
2
3
3
2
2
3
3
2
1
13
8

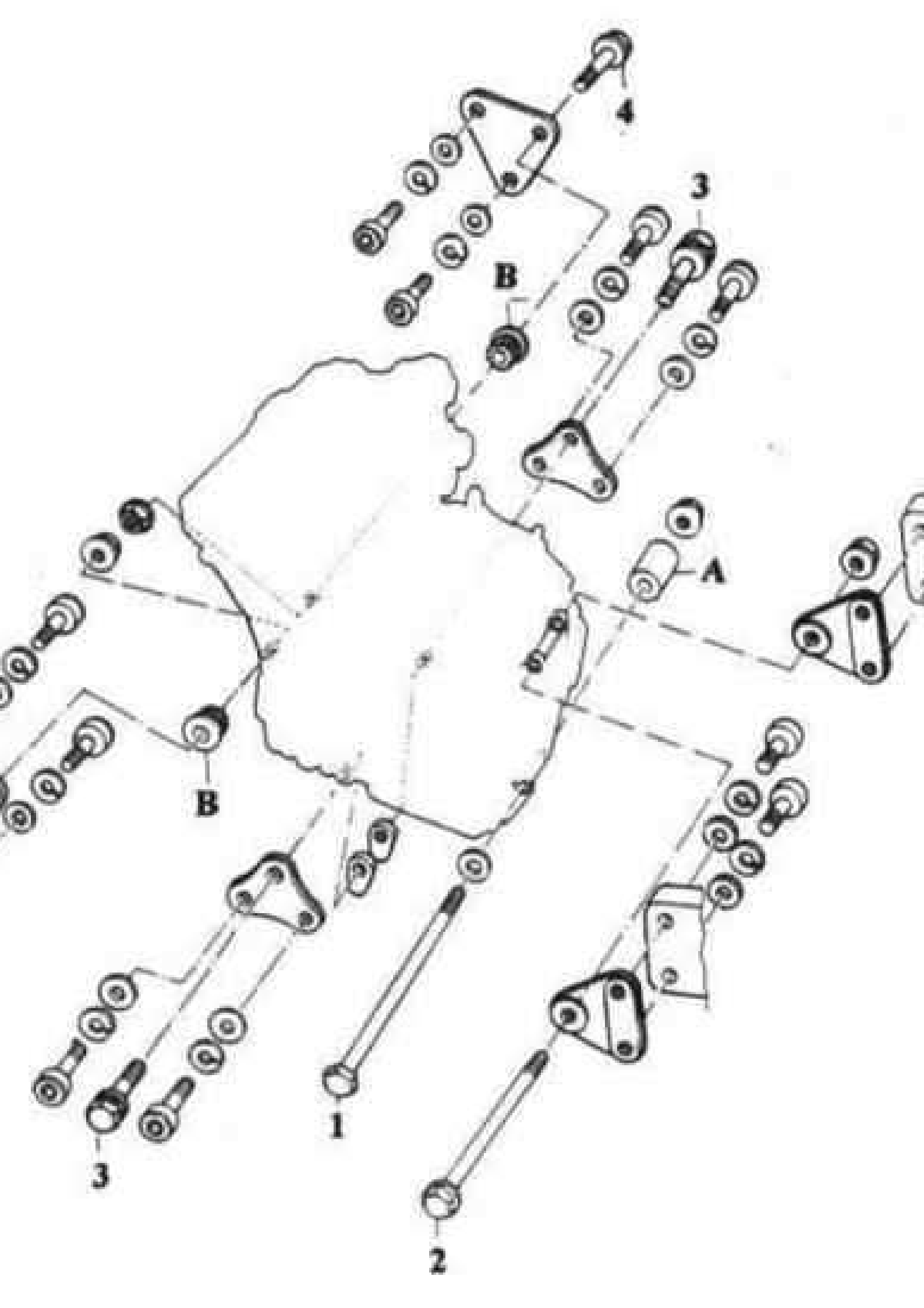
4
3
B
A
B
3
1
2

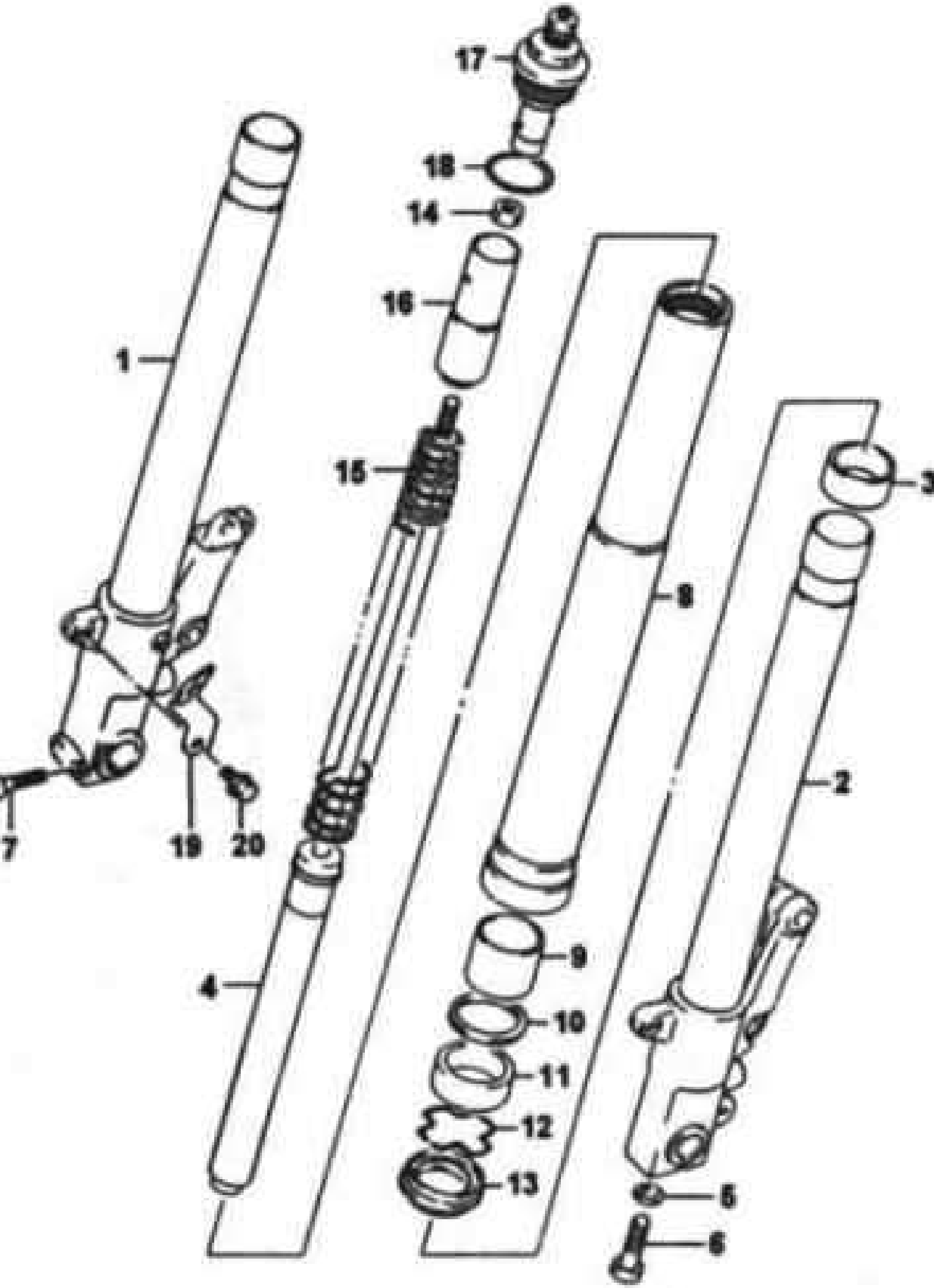
17
18
14
16
1
15
3
8
2
7
19
20
9
4
10
11
12
13
5
6

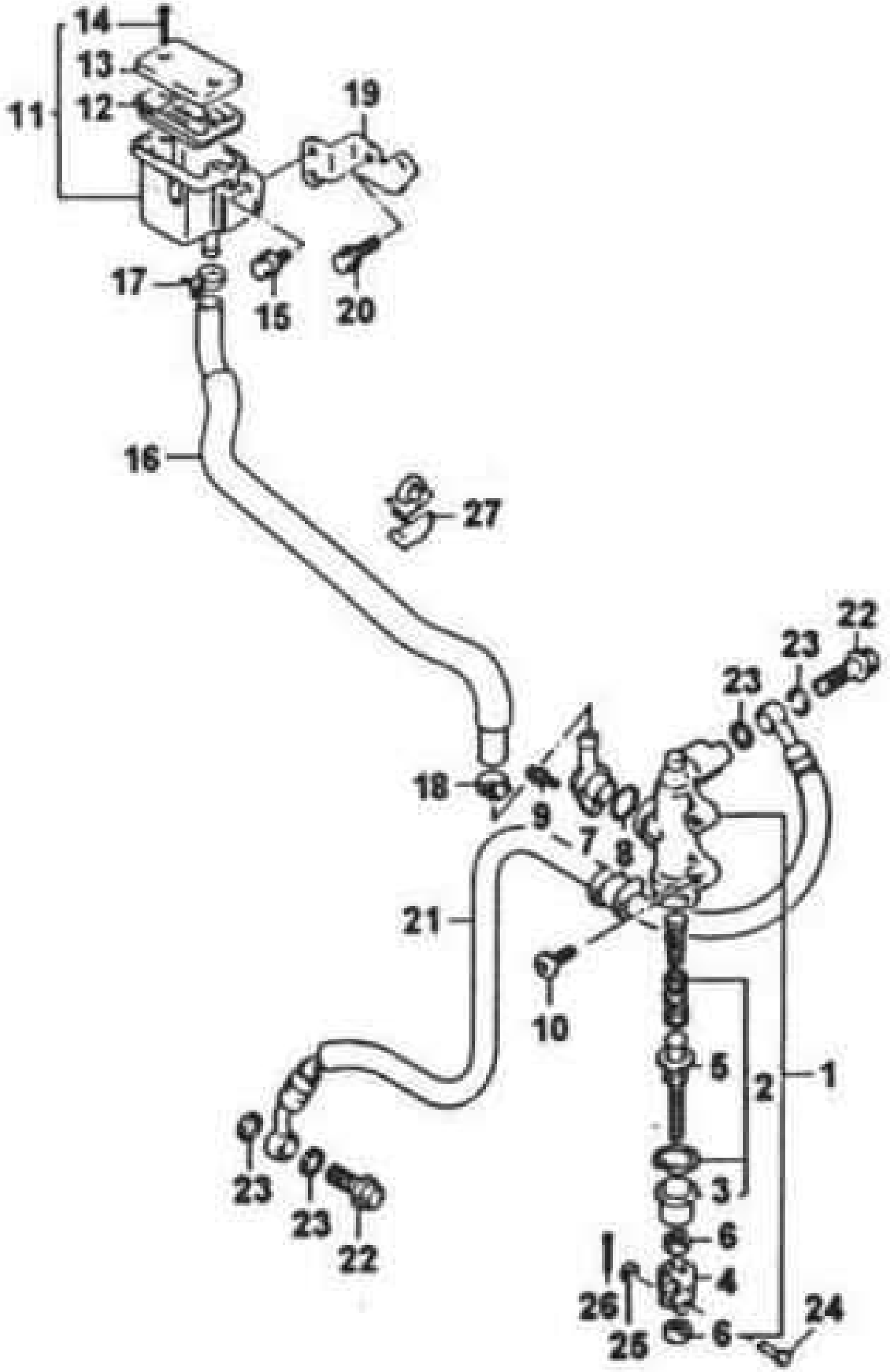
14
13
12
11
19
17
15
20
16
27
22
23
23
18
9
7
8
21
10
5
2
1
23
23
22
3
6
4
26
25
6
24

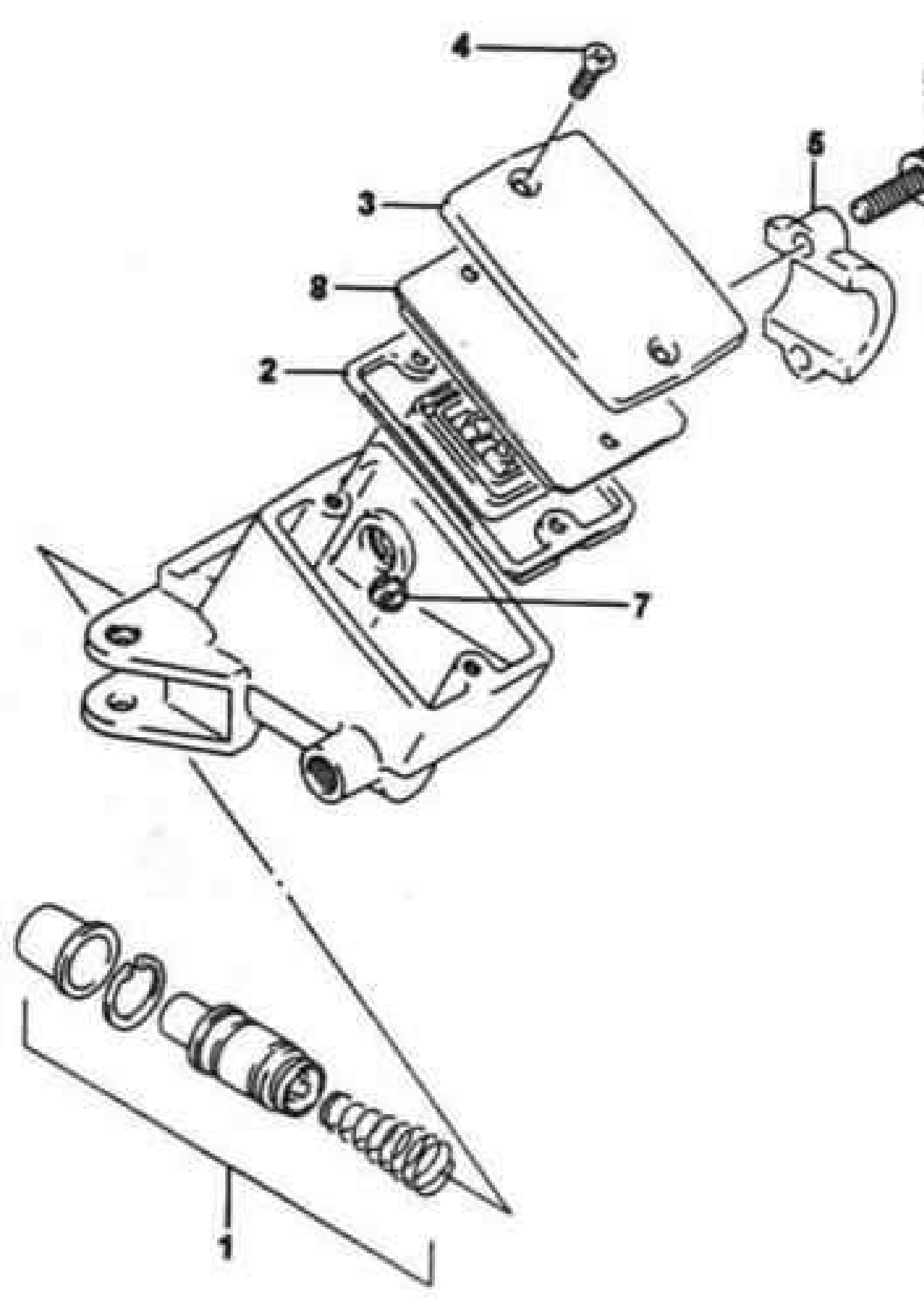
4
5
3
8
2
7
1

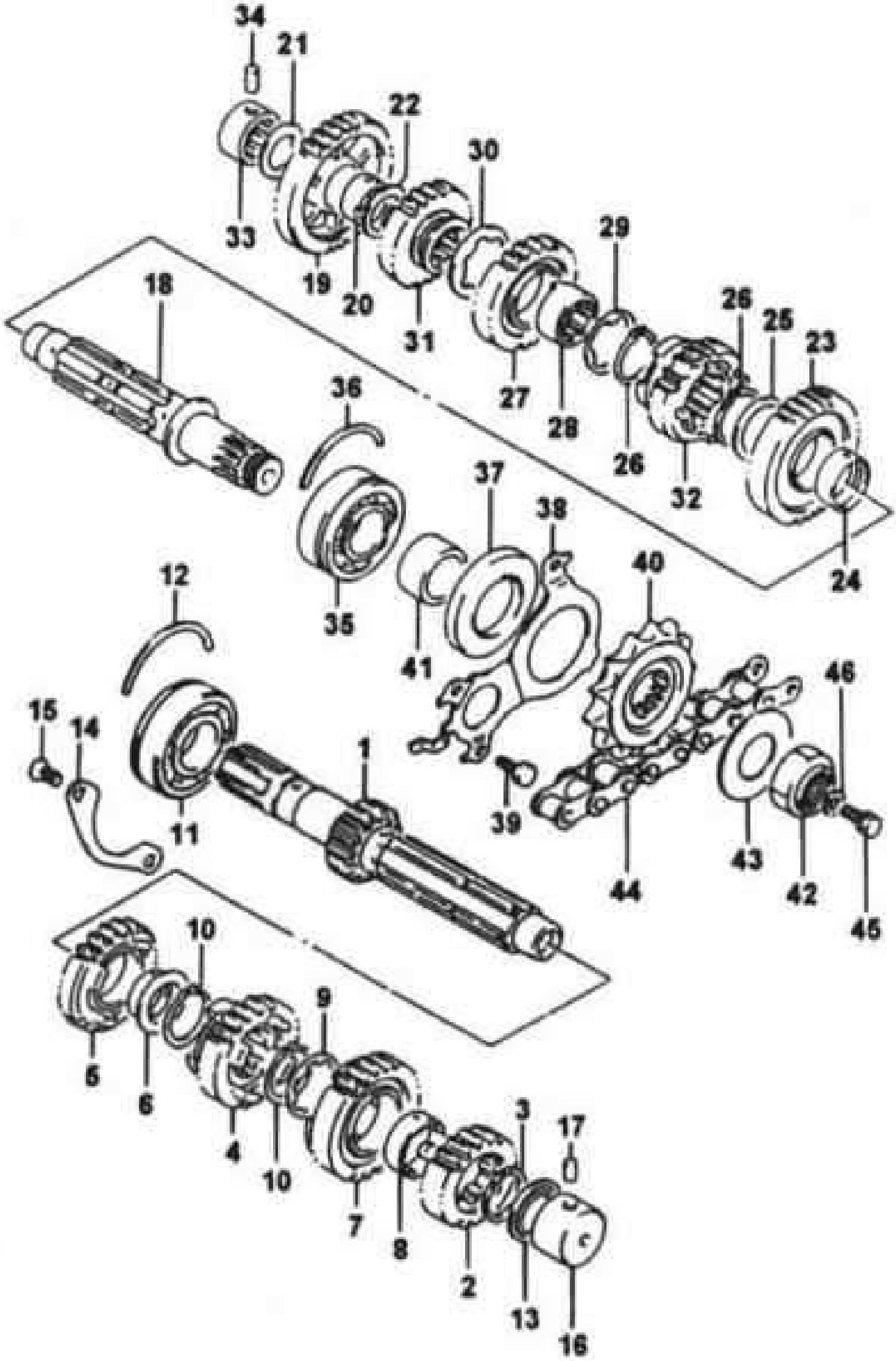
34
21
22
30
33
19
20
31
29
18
27
28
26
25
23
36
26
32
24
37
38
35
40
12
41
46
15
14
1
39
11
43
44
42
45
10
9
5
6
4
10
3
17
7
8
2
13
16

ce the cylinder head is made of um, which is soft and easily damaged, the plugs into the head by hand.

NES WT ***Since the plugs are quite recessed, slip a short length of hose over the end of the plug to use as a tool to ad it into place. The hose will grip plug well enough to turn it, but will to slip if the plug begins to cross-ad in the hole - this will prevent aged threads and the mpanying repair costs.***

e the plugs are finger tight, the job can ished with a socket. Refer to this er's Specifications for the correct . Do not over-tighten them.
connect the spark plug caps.

alve clearances - heck and adjustment

engine must be completely cool for this nance procedure, so let the machine sit ht before beginning.
ove the spark plugs (see Section 4).
ove the valve cover (see Chapter 2).
ove the cover from the signal generator apter 2).
the crankshaft with a box wrench or on the large hex of the signal generator e T mark on the rotor is aligned with the mark on the pickup coil **(see tion)**.
n: DO NOT use the signal generator olt to turn the crankshaft - it may r strip out. Also be sure to turn the in its normal direction of rotation.
notches in the ends of the camshafts now be pointing away from each other gned with the gasket mating surface on linder head **(see illustration)**. Also the position of the no. 1 cylinder cam - they should be in one of the

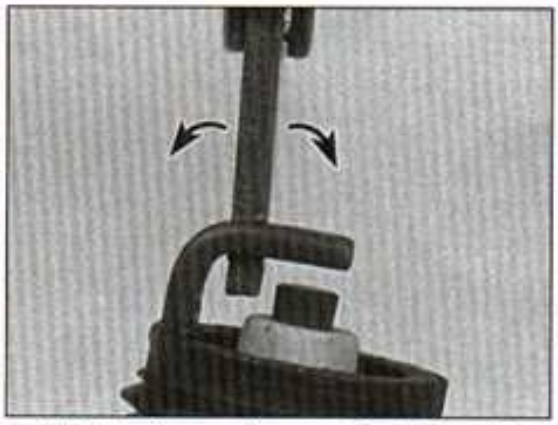

4.7b To change the gap, bend the side electrode only, as indicated by the arrows, and be very careful not to crack or chip the ceramic insulator surrounding the center electrode

acceptable positions for valve adjustment **(see illustrations)**. If the camshafts aren't positioned correctly, rotate the engine one full turn more, so the signal generator T mark and timing mark again line up. The camshafts should now be positioned correctly.

7 With the engine in this position, the following valves can be checked:
a) No. 1, intake and exhaust
b) No. 2, exhaust
c) No. 3, intake

Screw-type valve adjusters

8 Start with the no. 1 intake valve clearance. Insert a feeler gauge of the thickness listed in this Chapter's Specifications between each valve stem and cam lobe adjuster screw **(see illustration)**. Pull the feeler gauge out slowly - you should feel a slight drag. If there's no drag, the clearance is too loose. If there's a heavy drag, the clearance is too tight.

9 If the clearance is incorrect, loosen the adjuster screw locknut with a box wrench (see illustration 5.8) and turn the adjuster screw in or out as needed.

10 Hold the adjuster screw with the box wrench (to keep it from turning) and tighten the locknut. Recheck the clearance to make sure it hasn't changed.

11 Now adjust the remaining valves listed in

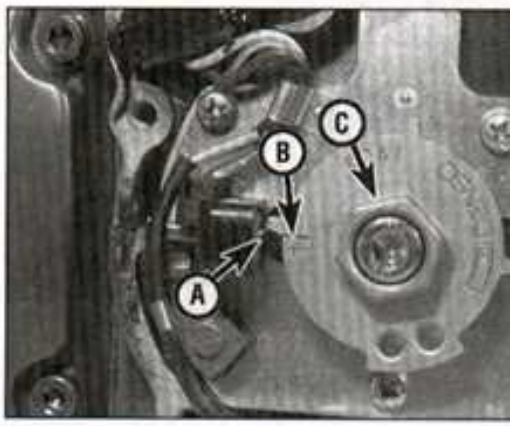

5.5 Turn the engine in its normal directi of rotation until the T mark and pickup c protrusion align

A Pickup coil protrusion
B T mark
C Use this hex to turn the engine - DO NO use the Allen bolt in the center of the he

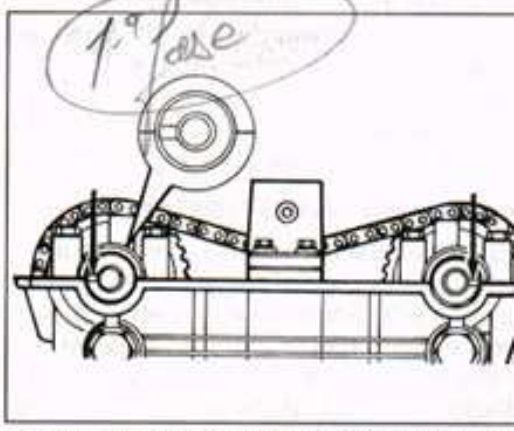

5.6a When correctly positioned for the first stage of valve adjustment, the camshaft notches should point away fro each other - if they don't, turn the engin another full turn

Step 7, following the same procedure y used for the No. 1 cylinder valves. Make s to use a feeler gauge of the specif thickness.

12 Rotate the crankshaft one full turn a again align the T mark on the rotor with t protrusion on the pickup coil (see illustrat

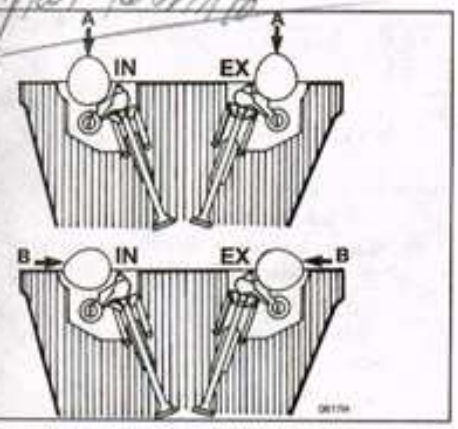

Acceptable cam lobe positions for ve adjustment (screw-type valve adjusters)

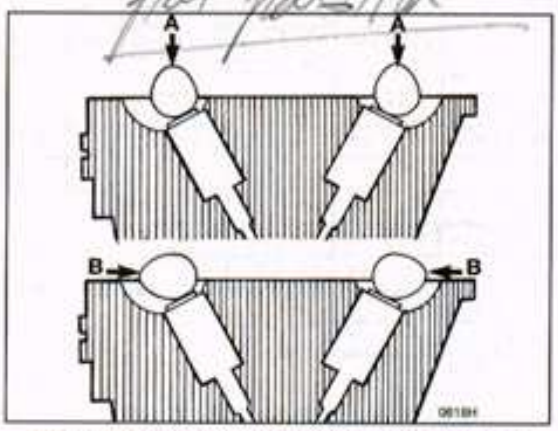

5.6c Acceptable cam lobe positions for valve adjustment (shim-type valve adjusters)

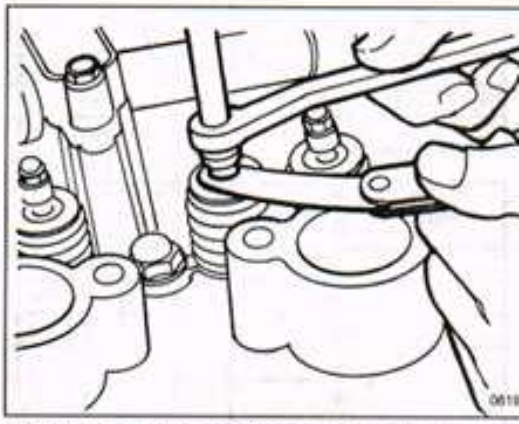

5.8 Loosen the locknut with a box wrenc and turn the adjusting screw with a screwdriver to change the clearance (screw-type valve adjusters)

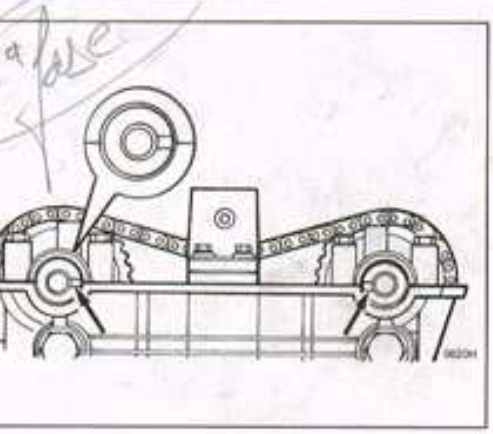

12 When correctly positioned for the econd stage of valve adjustment, the amshaft notches should point toward ch other - if they don't, turn the engine another full turn

The notches in the ends of the camshafts uld now point toward each other **(see tration).**

Adjust the following valves as described eps 8 and 9 (see illustration 5.8):

No. 2, intake
No. 3, exhaust
No. 4, intake and exhaust

m-type valve adjusters

Start with the no. 1 intake valve clearance. rt a feeler gauge of the thickness listed in Chapter's Specifications between each e stem and rocker arm **(see illustration).** the feeler gauge out slowly - you should a slight drag. If there's no drag, the

5.14 Check valve clearance with a feeler gauge between the rocker arm and adjusting shim (shim-type valve adjusters)

clearance is too loose. If there's a heavy drag, the clearance is too tight.

15 If the clearance is incorrect, select a feeler gauge of a thickness that will fit with a light drag. Write down the thickness of this feeler gauge next to the number and position of the valve (for example, No. 1 left intake, 0.20 mm). This is the actual valve clearance, which you will need later to select new valve shims.

16 Check the remaining valves listed in Step 7 and write down the clearances of any that aren't within the Specifications.

17 Rotate the crankshaft one full turn and again align the T mark on the rotor with the protrusion on the pickup coil (see illustration 5.5). The notches in the ends of the camshafts should now point toward each other (see illustration 5.12).

5.19 Valve clearance is changed by varying the thickness of the adjusting s (shim-type valve adjusters)

18 Measure the following valves described in Steps 14 and 15

a) No. 2, intake
b) No. 3, exhaust
c) No. 4, intake and exhaust

Write down the number and location of a the valves that aren't within the Specificatio

19 To correct the clearances, turn the en to the position described in Step 5. Pry rocker arm aside with a suitable tool, lift shim out with a magnet **(see illustration),** measure its thickness.

20 Select new valve shims to correct clearances on any valves not within Specifications. To do this, compare clearance you've measured with the fi shim thickness using the selection charts intake and exhaust valves **(see illustratio**

Optional shims — These shims are available as a set.

MEASURED CLEARANCE (mm) / SUFFIX NO.	230	235	240	245	250	255	260	265	270	275	280	285	290	295	300	305	310	315	320	325	330	335	340	345	350
PRESENT SHIM SIZE (mm)	2.30	2.35	2.40	2.45	2.50	2.550	2.60	2.65	2.70	2.75	2.80	2.85	2.90	2.95	3.00	3.05	3.10	3.15	3.2	3.25	3.3	3.35	3.4	3.45	3.5
0.00 – 0.04			2.30	2.35	2.40	2.45	2.50	2.550	2.60	2.65	2.70	2.75	2.80	2.85	2.90	2.95	3.00	3.05	3.10	3.15	3.2	3.25	3.3	3.35	3.4
0.05 – 0.09		2.30	2.35	2.40	2.45	2.50	2.55	2.60	2.65	2.70	2.75	2.80	2.85	2.90	2.95	3.00	3.05	3.10	3.15	3.2	3.25	3.3	3.35	3.4	3.45
0.10 – 0.20	SPECIFIED CLEARANCE/NO ADJUSTMENT REQUIRED																								
0.21 – 0.25	2.40	2.45	2.50	2.55	2.60	2.65	2.70	2.75	2.80	2.85	2.90	2.95	3.00	3.05	3.10	3.15	3.2	3.25	3.3	3.35	3.4	3.45	3.5	3.5	
0.26 – 0.30	2.45	2.50	2.55	2.60	2.65	2.70	2.75	2.80	2.85	2.90	2.95	3.00	3.05	3.10	3.15	3.2	3.25	3.3	3.35	3.4	3.45	3.5			
0.31 – 0.35	2.50	2.55	2.60	2.65	2.70	2.75	2.80	2.85	2.90	2.95	3.00	3.05	3.10	3.15	3.2	3.25	3.3	3.35	3.4	3.45	3.5				
0.36 – 0.40	2.55	2.60	2.65	2.70	2.75	2.80	2.85	2.90	2.95	3.00	3.05	3.10	3.15	3.2	3.25	3.3	3.35	3.4	3.45	3.5					
0.41 – 0.45	2.60	2.65	2.70	2.75	2.80	2.85	2.90	2.95	3.00	3.05	3.10	3.15	3.2	3.25	3.3	3.35	3.4	3.45	3.5						
0.46 – 0.50	2.65	2.70	2.75	2.80	2.85	2.90	2.95	3.00	3.05	3.10	3.15	3.2	3.25	3.3	3.35	3.4	3.45	3.5							
0.51 – 0.55	2.70	2.75	2.80	2.85	2.90	2.95	3.00	3.05	3.10	3.15	3.2	3.25	3.3	3.35	3.4	3.45	3.5								
0.56 – 0.60	2.75	2.80	2.85	2.90	2.95	3.00	3.05	3.10	3.15	3.2	3.25	3.3	3.35	3.4	3.45	3.5									
0.61 – 0.65	2.80	2.85	2.90	2.95	3.00	3.05	3.10	3.15	3.2	3.25	3.3	3.35	3.4	3.45	3.5										
0.66 – 0.70	2.85	2.90	2.95	3.00	3.05	3.10	3.15	3.2	3.25	3.3	3.35	3.4	3.45	3.5											
0.71 – 0.75	2.90	2.95	3.00	3.05	3.10	3.15	3.2	3.25	3.3	3.35	3.4	3.45	3.5												
0.76 – 0.80	2.95	3.00	3.05	3.10	3.15	3.2	3.25	3.3	3.35	3.4	3.45	3.5													
0.81 – 0.85	3.00	3.05	3.10	3.15	3.2	3.25	3.3	3.35	3.4	3.45	3.5														
0.86 – 0.90	3.05	3.10	3.15	3.2	3.25	3.3	3.35	3.4	3.45	3.5															
0.91 – 0.95	3.10	3.15	3.2	3.25	3.3	3.35	3.4	3.45	3.5																
0.96 – 1.00	3.15	3.2	3.25	3.3	3.35	3.4	3.45	3.5																	
1.01 – 1.05	3.2	3.25	3.3	3.35	3.4	3.45	3.5																		
1.06 – 1.10	3.25	3.3	3.35	3.4	3.45	3.5																			
1.11 – 1.15	3.3	3.35	3.4	3.45	3.5																				

HOW TO USE THIS CHART:

I. Measure valve clearance.
II. Measure present shim size.
III. Match clearance in vertical column with present shim size in horizontal column.

EXAMPLE

Valve clearance is	0.23 mm
Present shim size	2.70 mm
Shim size to be used	2.80 mm

5.20a Intake valve shim selection chart

Optional shims — These shims are available as a set.

MEASURED CLEARANCE (mm) / SUFFIX NO.	230	235	240	245	250	255	260	265	270	275	280	285	290	295	300	305	310	315	320	325	330	335	340	345	350
PRESENT SHIM SIZE (mm)	2.30	2.35	2.40	2.45	2.50	2.550	2.60	2.65	2.70	2.75	2.80	2.85	2.90	2.95	3.00	3.05	3.10	3.15	3.2	3.25	3.3	3.35	3.4	3.45	3.5
0.00 – 0.04				2.30	2.35	2.40	2.45	2.50	2.550	2.60	2.65	2.70	2.75	2.80	2.85	2.90	2.95	3.00	3.05	3.10	3.15	3.2	3.25	3.3	3.35
0.05 – 0.09			2.30	2.35	2.40	2.45	2.50	2.550	2.60	2.65	2.70	2.75	2.80	2.85	2.90	2.95	3.00	3.05	3.10	3.15	3.2	3.25	3.3	3.35	3.4
0.10 – 0.14		2.30	2.35	2.40	2.45	2.50	2.550	2.60	2.65	2.70	2.75	2.80	2.85	2.90	2.95	3.00	3.05	3.10	3.15	3.2	3.25	3.3	3.35	3.4	3.45
0.15 – 0.25	SPECIFIED CLEARANCE/NO ADJUSTMENT REQUIRED																								
0.26 – 0.30	2.40	2.45	2.50	2.55	2.60	2.65	2.70	2.75	2.80	2.85	2.90	2.95	3.00	3.05	3.10	3.15	3.2	3.25	3.3	3.35	3.4	3.45	3.5	3.5	
0.31 – 0.35	2.45	2.50	2.55	2.60	2.65	2.70	2.75	2.80	2.85	2.90	2.95	3.00	3.05	3.10	3.15	3.2	3.25	3.3	3.35	3.4	3.45	3.5			
0.36 – 0.40	2.50	2.55	2.60	2.65	2.70	2.75	2.80	2.85	2.90	2.95	3.00	3.05	3.10	3.15	3.2	3.25	3.3	3.35	3.4	3.45	3.5				
0.41 – 0.45	2.55	2.60	2.65	2.70	2.75	2.80	2.85	2.90	2.95	3.00	3.05	3.10	3.15	3.2	3.25	3.3	3.35	3.4	3.45	3.5					
0.46 – 0.50	2.60	2.65	2.70	2.75	2.80	2.85	2.90	2.95	3.00	3.05	3.10	3.15	3.2	3.25	3.3	3.35	3.4	3.45	3.5						
0.51 – 0.55	2.65	2.70	2.75	2.80	2.85	2.90	2.95	3.00	3.05	3.10	3.15	3.2	3.25	3.3	3.35	3.4	3.45	3.5							
0.56 – 0.60	2.70	2.75	2.80	2.85	2.90	2.95	3.00	3.05	3.10	3.15	3.2	3.25	3.3	3.35	3.4	3.45	3.5								
0.61 – 0.65	2.75	2.80	2.85	2.90	2.95	3.00	3.05	3.10	3.15	3.2	3.25	3.3	3.35	3.4	3.45	3.5									
0.66 – 0.70	2.80	2.85	2.90	2.95	3.00	3.05	3.10	3.15	3.2	3.25	3.3	3.35	3.4	3.45	3.5										
0.71 – 0.75	2.85	2.90	2.95	3.00	3.05	3.10	3.15	3.2	3.25	3.3	3.35	3.4	3.45	3.5											
0.76 – 0.80	2.90	2.95	3.00	3.05	3.10	3.15	3.2	3.25	3.3	3.35	3.4	3.45	3.5												
0.81 – 0.85	2.95	3.00	3.05	3.10	3.15	3.2	3.25	3.3	3.35	3.4	3.45	3.5													
0.86 – 0.90	3.00	3.05	3.10	3.15	3.2	3.25	3.3	3.35	3.4	3.45	3.5														
0.91 – 0.95	3.05	3.10	3.15	3.2	3.25	3.3	3.35	3.4	3.45	3.5															
0.96 – 1.00	3.10	3.15	3.2	3.25	3.3	3.35	3.4	3.45	3.5																
1.01 – 1.05	3.15	3.2	3.25	3.3	3.35	3.4	3.45	3.5																	
1.06 – 1.10	3.2	3.25	3.3	3.35	3.4	3.45	3.5																		
1.11 – 1.15	3.25	3.3	3.35	3.4	3.45	3.5																			
1.16 – 1.20	3.3	3.35	3.4	3.45	3.5																				

HOW TO USE THIS CHART:

I. Measure tappet clearance with engine cold.
II. Measure present shim size.
III. Match clearance in vertical column with present shim size in horizontal column.

EXAMPLE

Valve clearance is	0.27 mm
Present shim size	2.90 mm
Shim size to be used	3.00 mm

5.20b Exhaust valve shim selection chart

a list of the shims you need for each and take it to a Suzuki dealer to ase new shims.

> **YNES INT** ***It is worthwhile noting down all the valve shim thicknesses to save time and expense when the valve arances are next adjusted; provided y are not worn or damaged, the ms can be moved to other locations.***

nstall the new shim in the valve spring ner, then pry the rocker arm back into ion.

A compression gauge with a threaded g for the spark plug hole is preferred the type that requires hand pressure to maintain the seal

22 Recheck the valve clearance as described in Steps 14 and 15.

23 Replace shims as needed for the remaining valves.

24 Rotate the engine to the position described in Step 17.

25 Replace shims as needed and recheck clearance on the valves listed in Step 18.

All models

26 Install the valve cover and all of the components that had to be removed to get it off.

6 Cylinder compression - check

1 Among other things, poor engine performance may be caused by leaking valves, incorrect valve clearances, a leaking head gasket, or worn pistons, rings and/or cylinder walls. A cylinder compression check will help pinpoint these conditions and can also indicate the presence of excessive carbon deposits in the cylinder heads.

2 The only tools required are a compression gauge and a spark plug wrench. Depending on the outcome of the initial test, a squirt-type oil can may also be needed.

3 Start the engine and allow it to reach normal operating temperature. Place the motorcycle on the centerstand or sidestand, remove the fuel tank, then remove the plugs (see Section 4, if necessary). carefully - don't strip the spark plug threads and don't burn your hands.

4 Disable the ignition by unpluggin primary wires from the coils (see Chap Be sure to mark the locations of the before detaching them.

5 Install the compression gauge in one spark plug holes **(see illustration)**. H block the throttle wide open.

6 Crank the engine over a minimum of f five revolutions (or until the gauge re stops increasing) and observe the movement of the compression gauge n as well as the final total gauge rea Repeat the procedure for the other cyli and compare the results to the value lis this Chapter's Specifications.

7 If the compression in both cylinders b quickly and evenly to the specified an you can assume the engine upper end reasonably good mechanical condition. or sticking piston rings and worn cylinde produce very little initial movement gauge needle, but compression will te build up gradually as the engine spins Valve and valve seat leakage, or head g leakage, is indicated by low compression which does not tend to bu

8 To further confirm your findings, a small amount of engine oil to each cylin inserting the nozzle of a squirt-type o through the spark plug holes. The oil wi

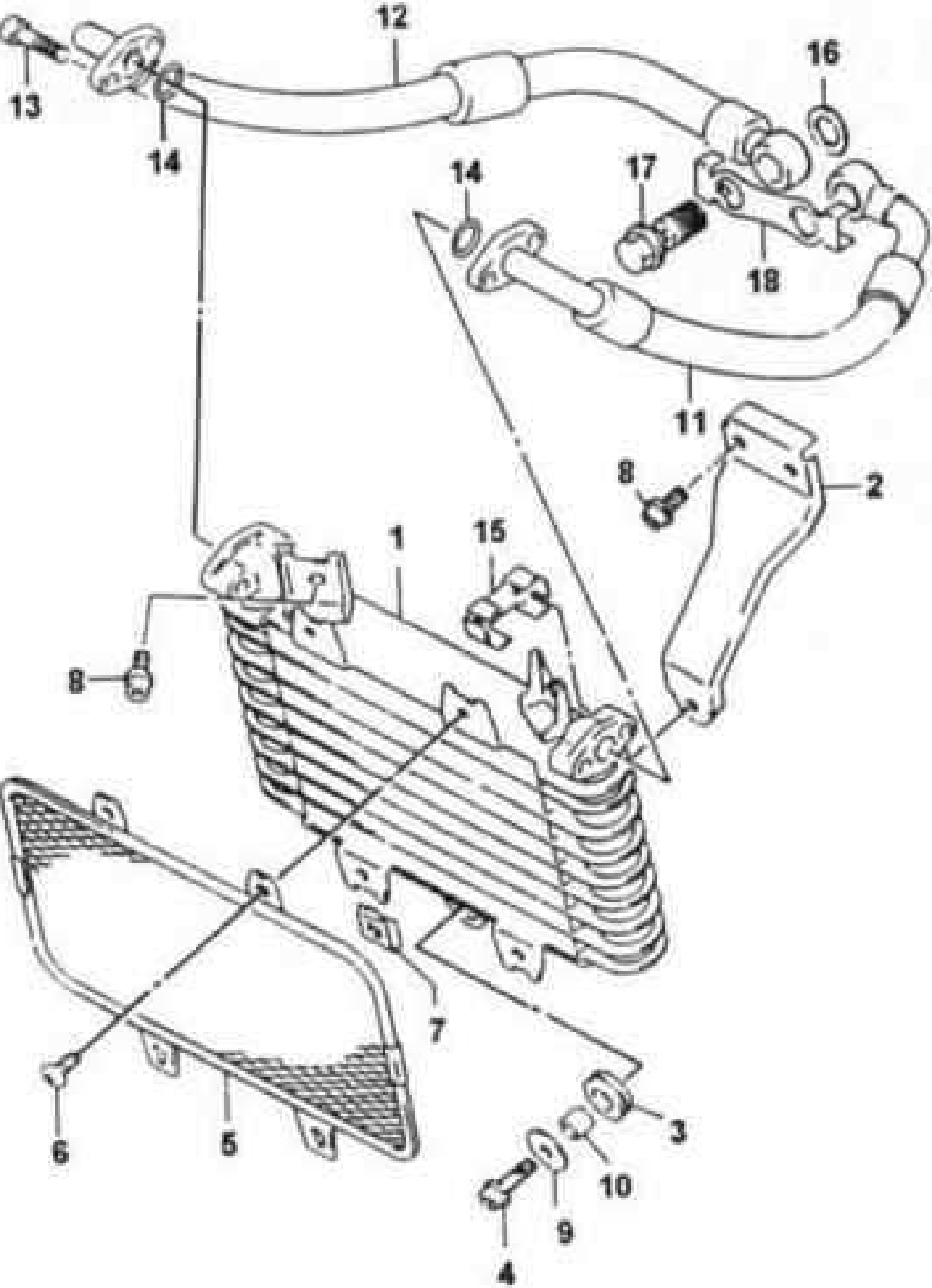
12
16
13
14
14
17
18
11
8
2
1
15
8
7
6
5
3
10
9
4

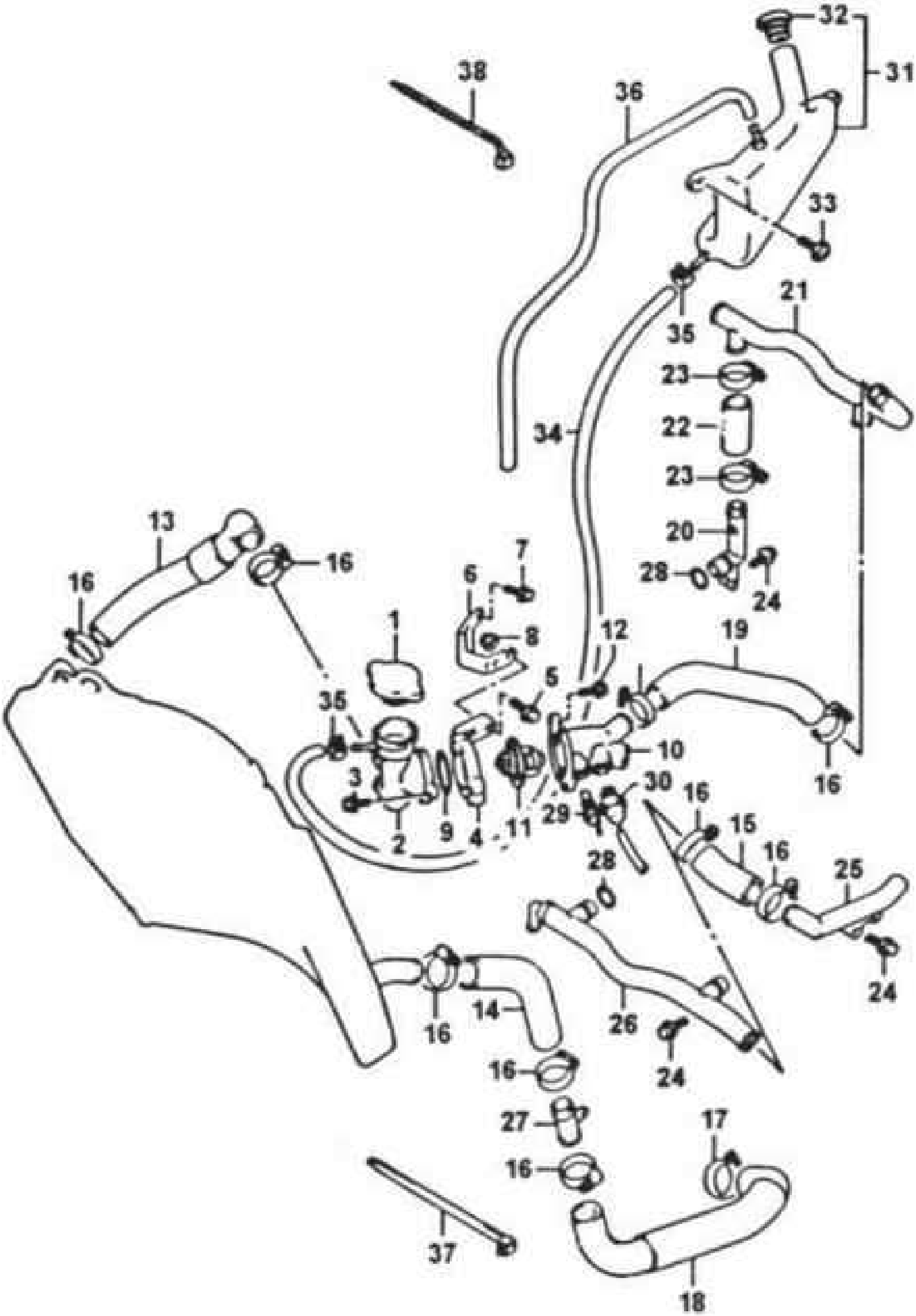
32
31
38
36
33
35
21
23
22
34
23
20
28
24
13
16
7
6
16
1
8
12
19
5
35
10
3
30
16
29
15
2
9
4
11
16
28
25
24
14
26
16
24
16
27
17
16
37
18

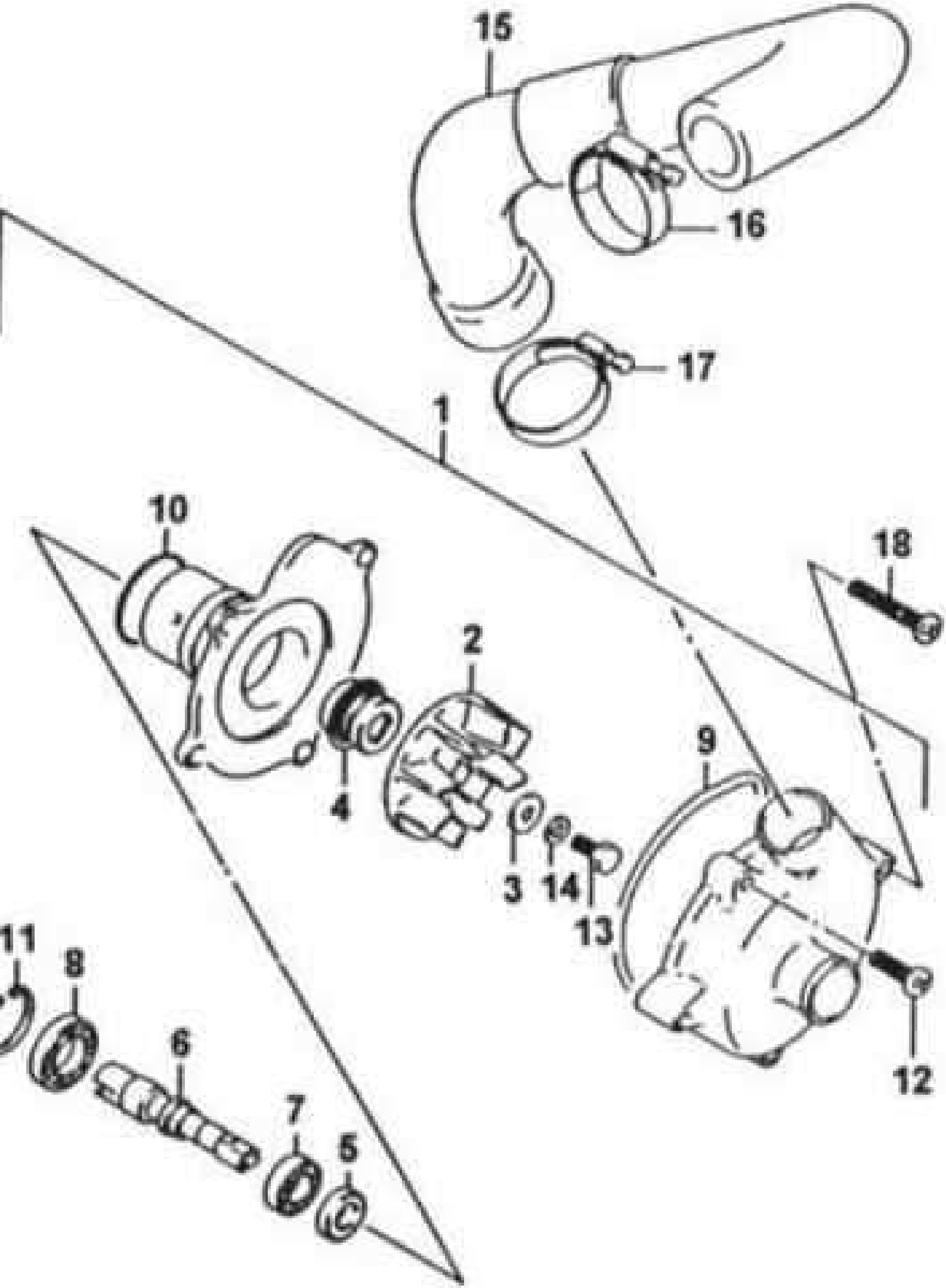
15
16
17
1
10
18
2
9
4
3
14
13
11
8
6
12
7
5

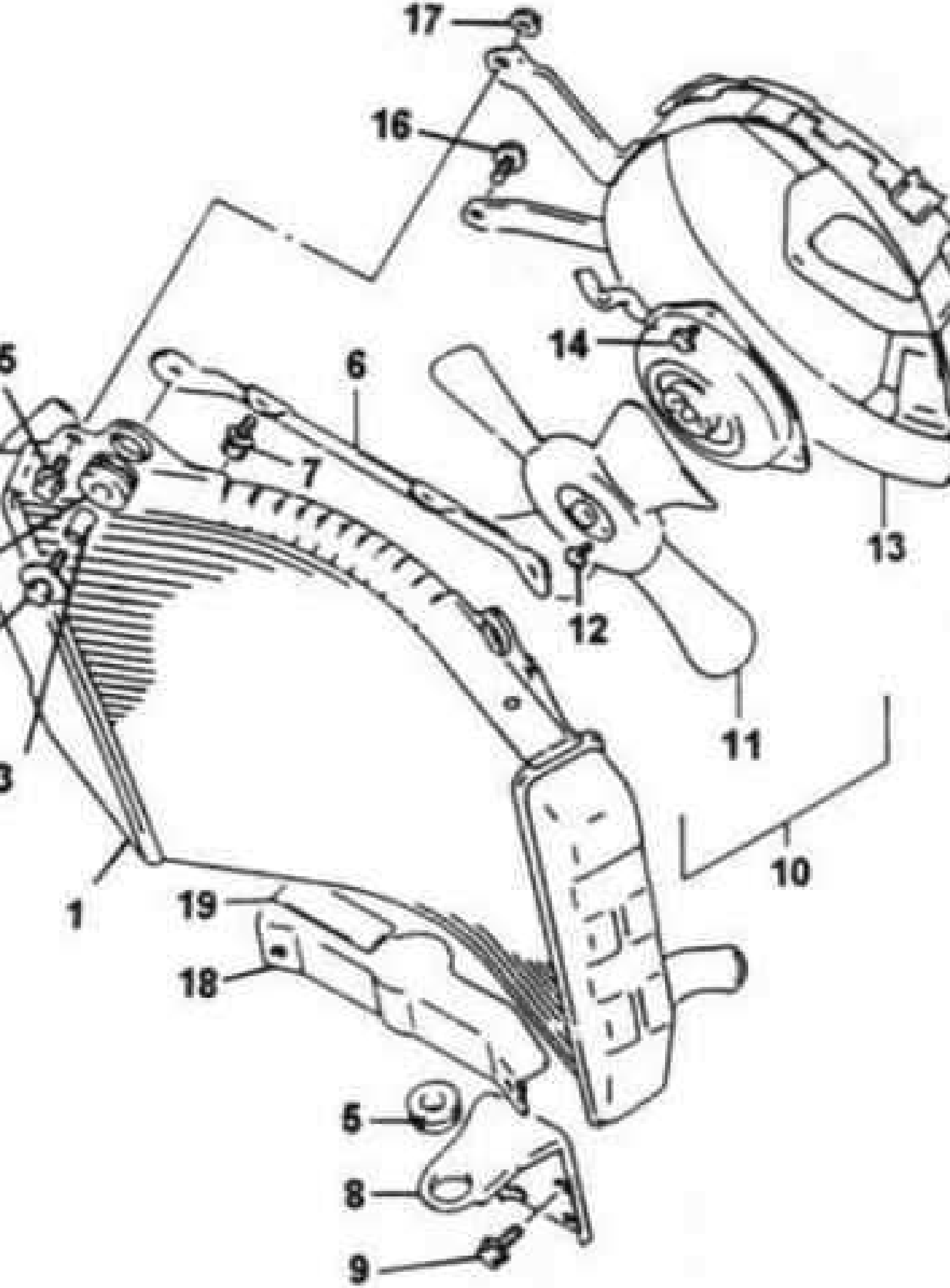
17
16
14
6
5
7
13
12
11
3
10
1
19
18
5
8
9

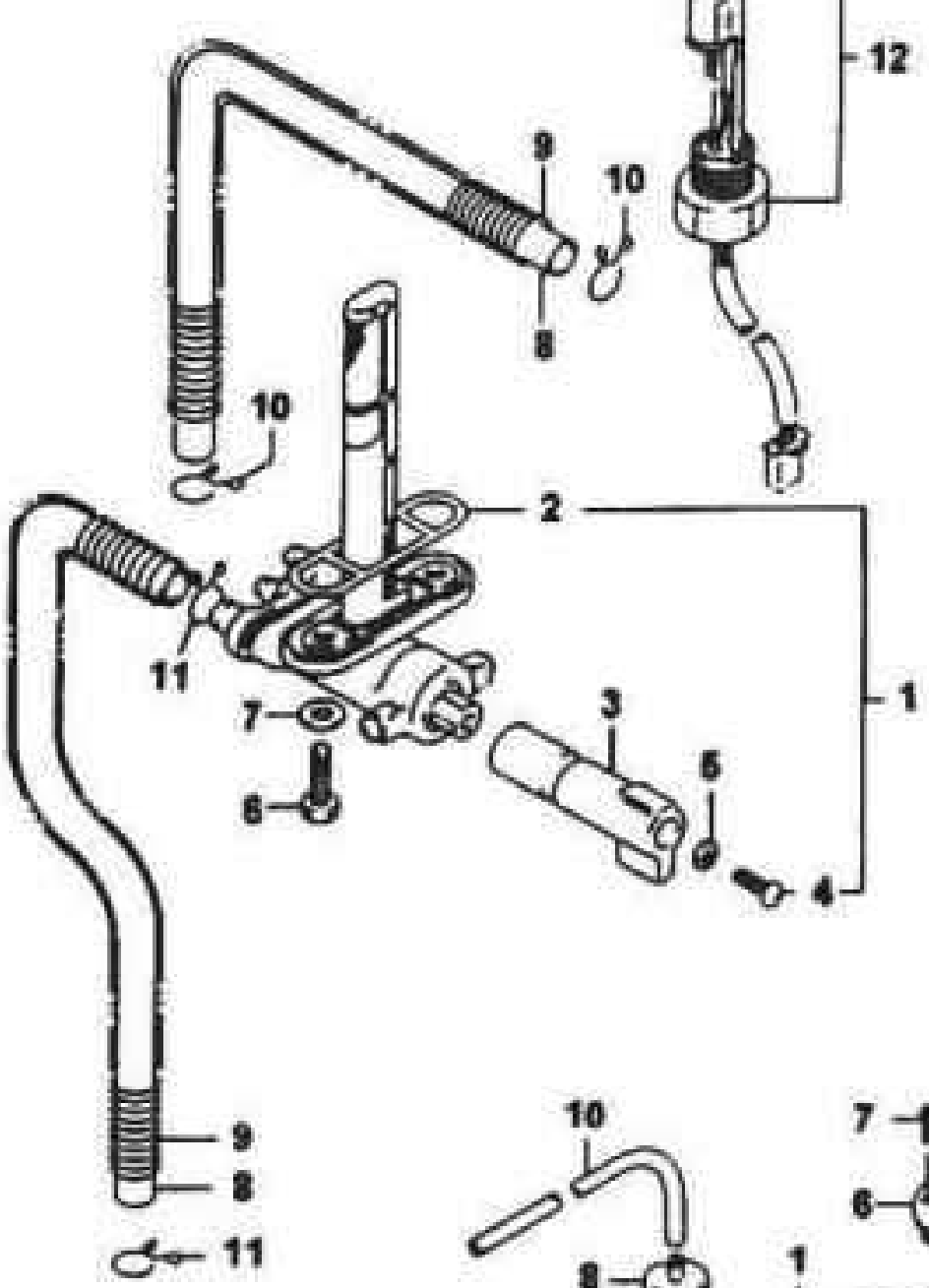
12
9
10
8
10
2
11
1
7
3
6
6
4
9
8
11

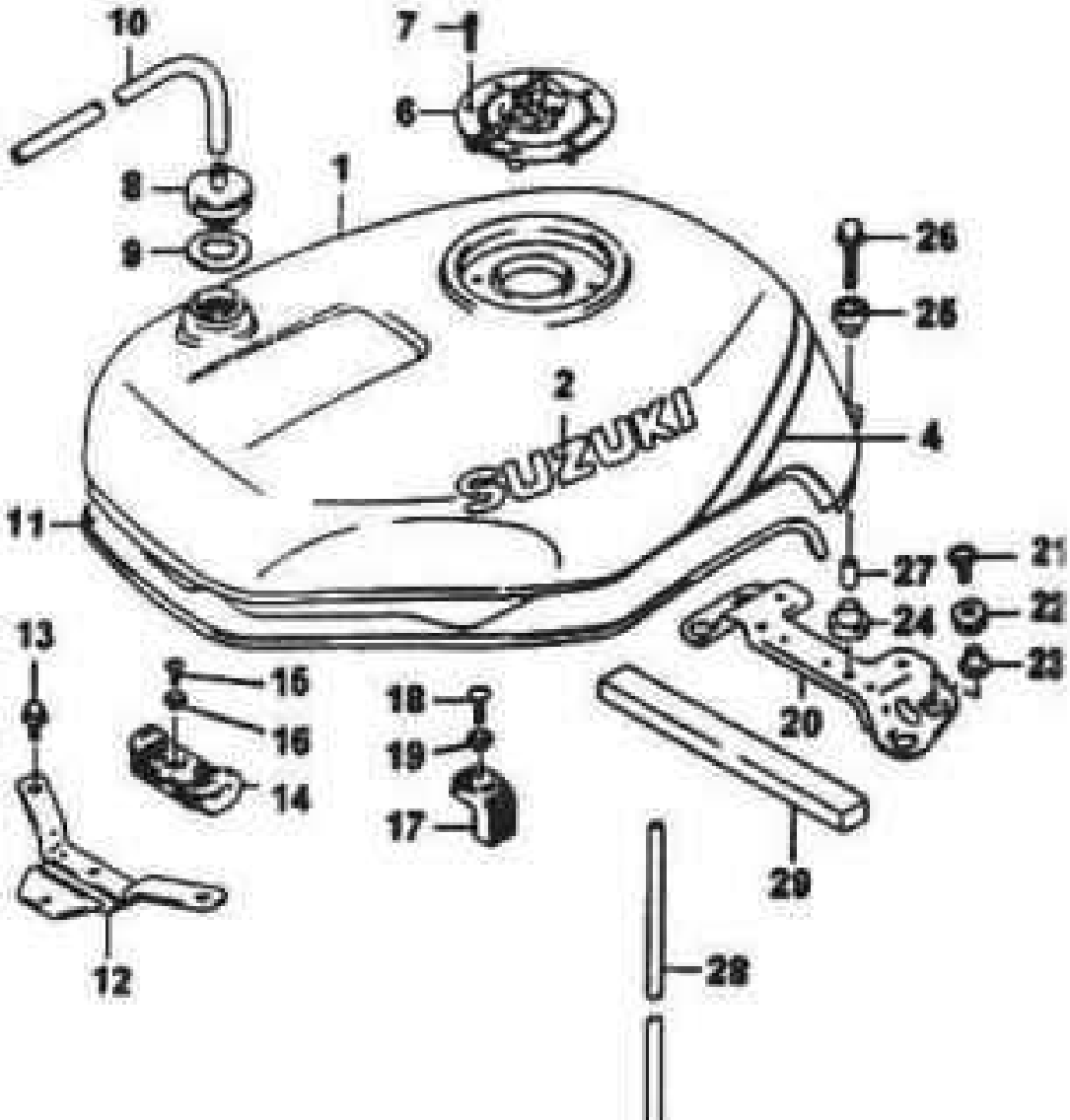
10
7
6
8
1
9
26
25
2
4
SUZUKI
11
27
21
24
22
23
13
15
16
18
19
20
14
17
29
12
28

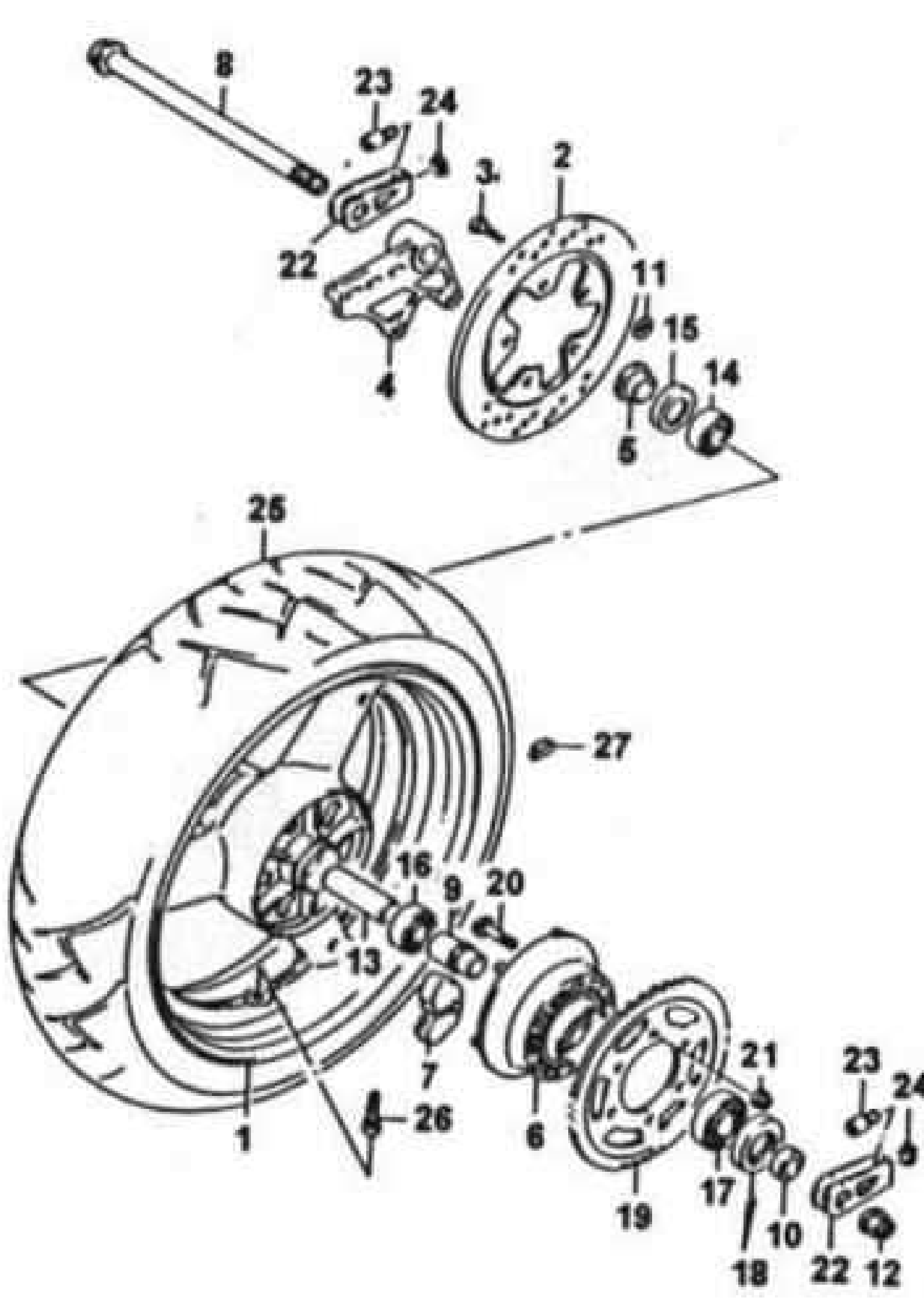
8
23
24
3
2
22
11
15
14
4
5
26
27
16
9
20
13
7
21
23
24
1
26
6
17
19
10
18
22
12

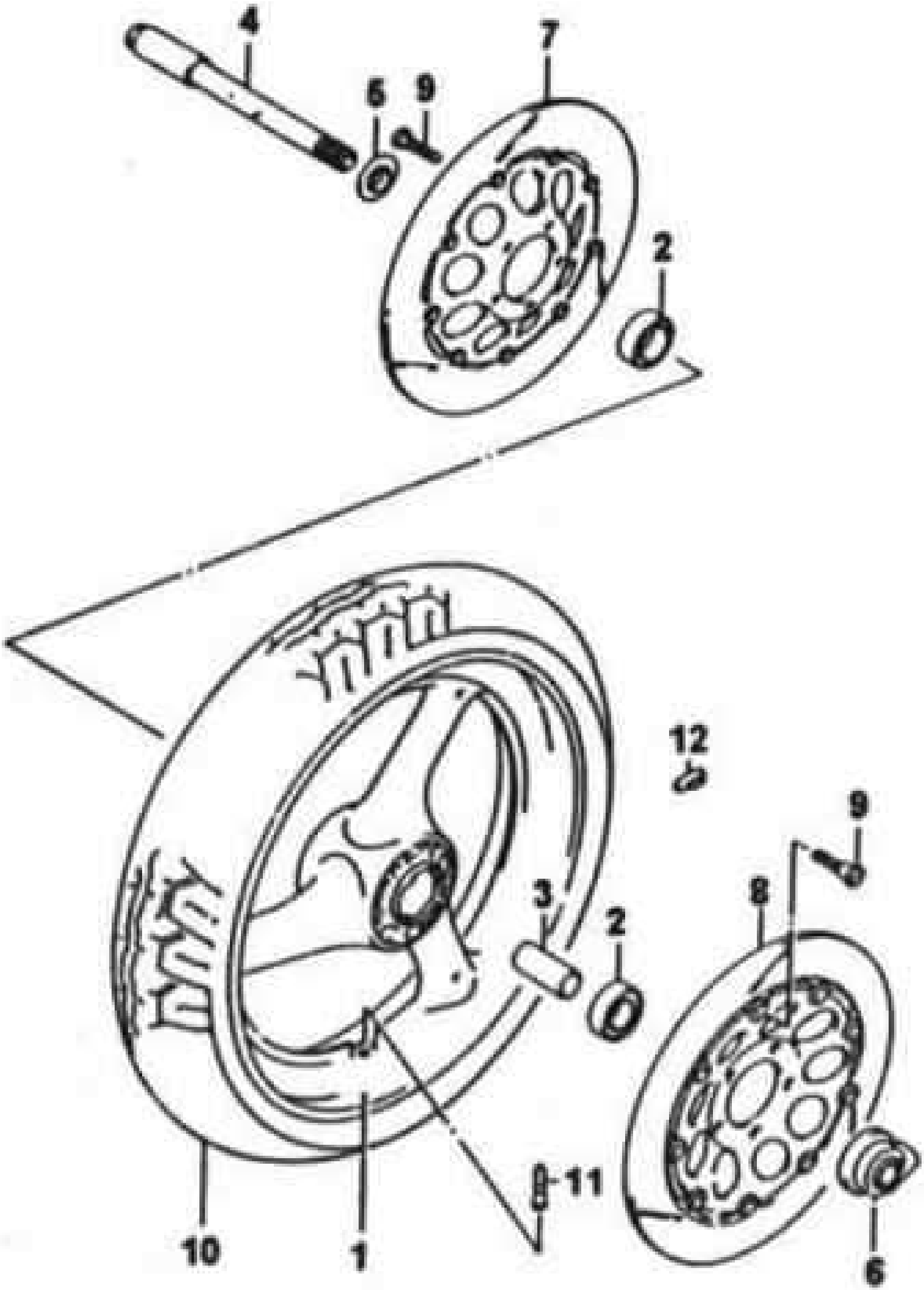
4
7
6
9
2
12
9
8
3
2
11
10
1
6

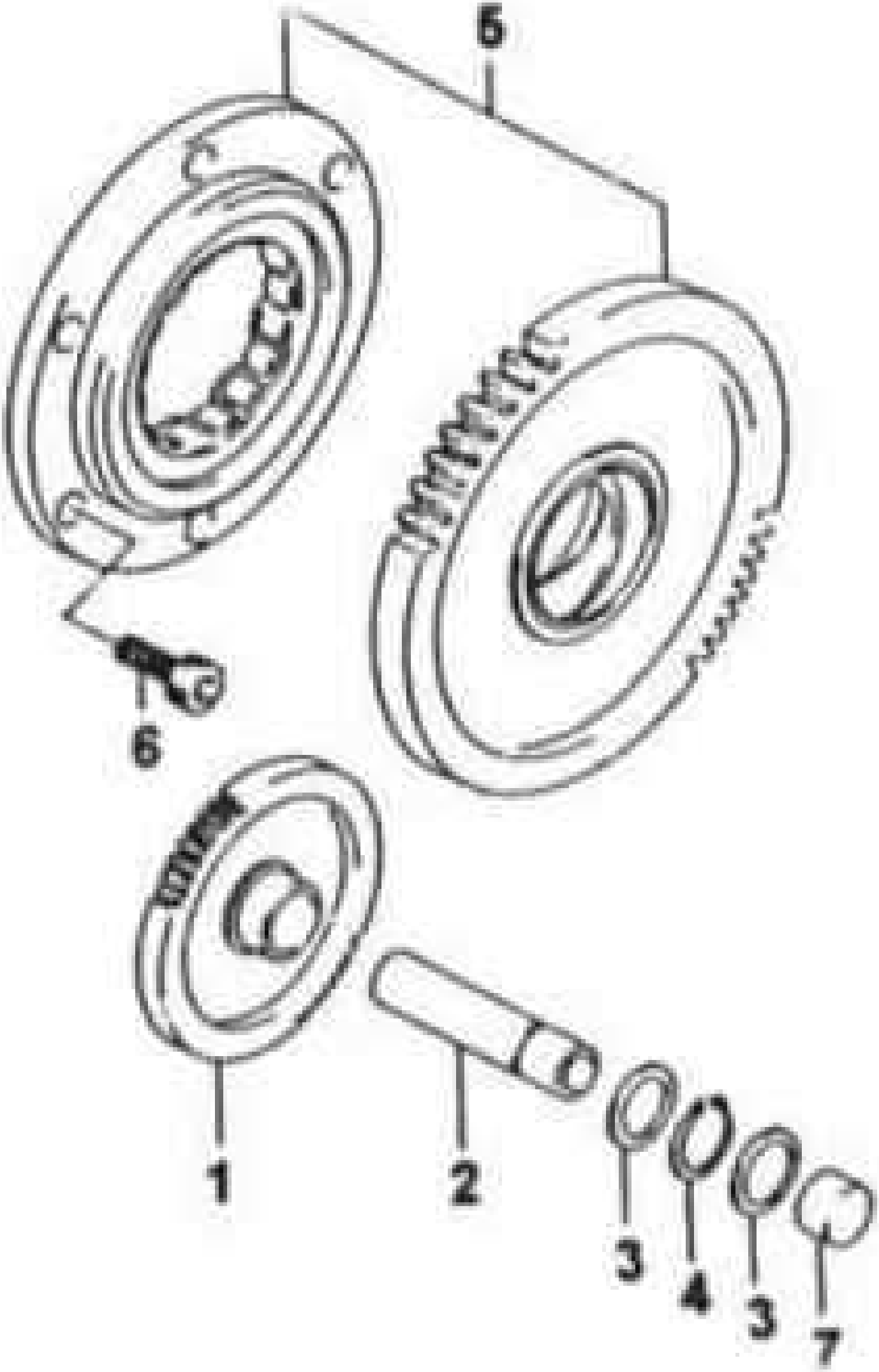
5
6
1
2
3
4
3
7

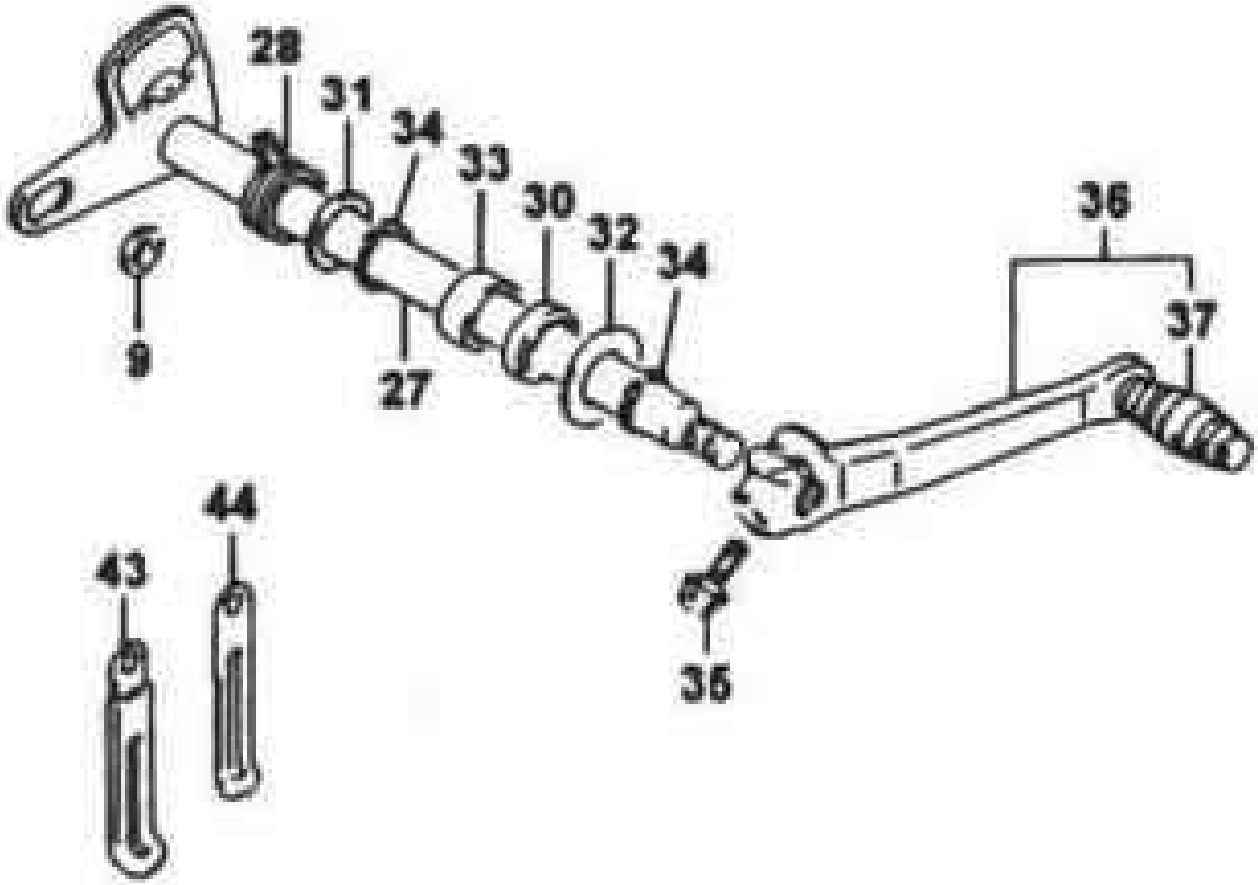
28
31
34
33
30
32
34
36
37
9
27
44
43
35

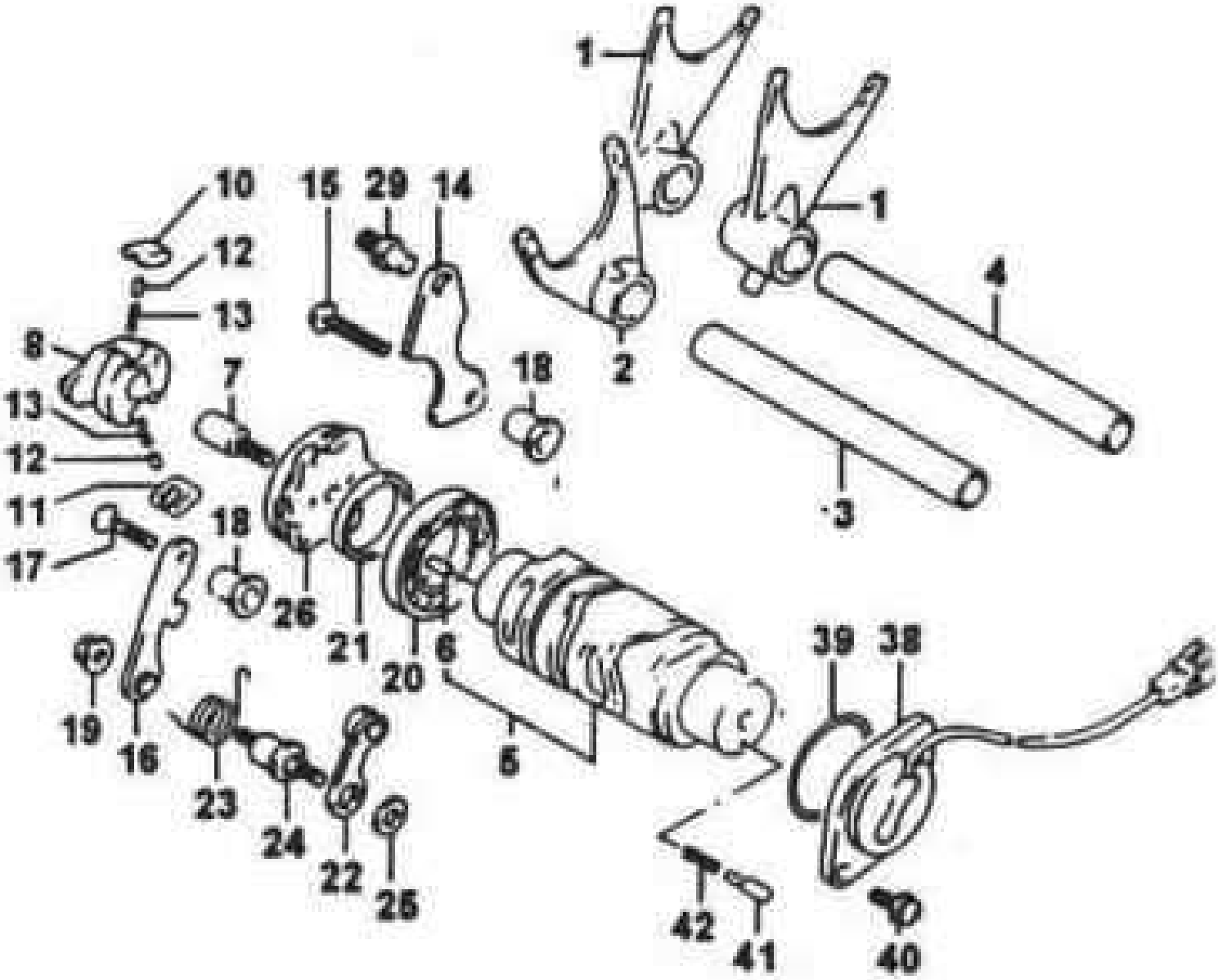
1
1
10
15
29
14
12
13
4
8
2
7
18
13
12
3
11
18
17
26
21
20
6
39
38
19
16
5
23
24
22
25
42
41
40

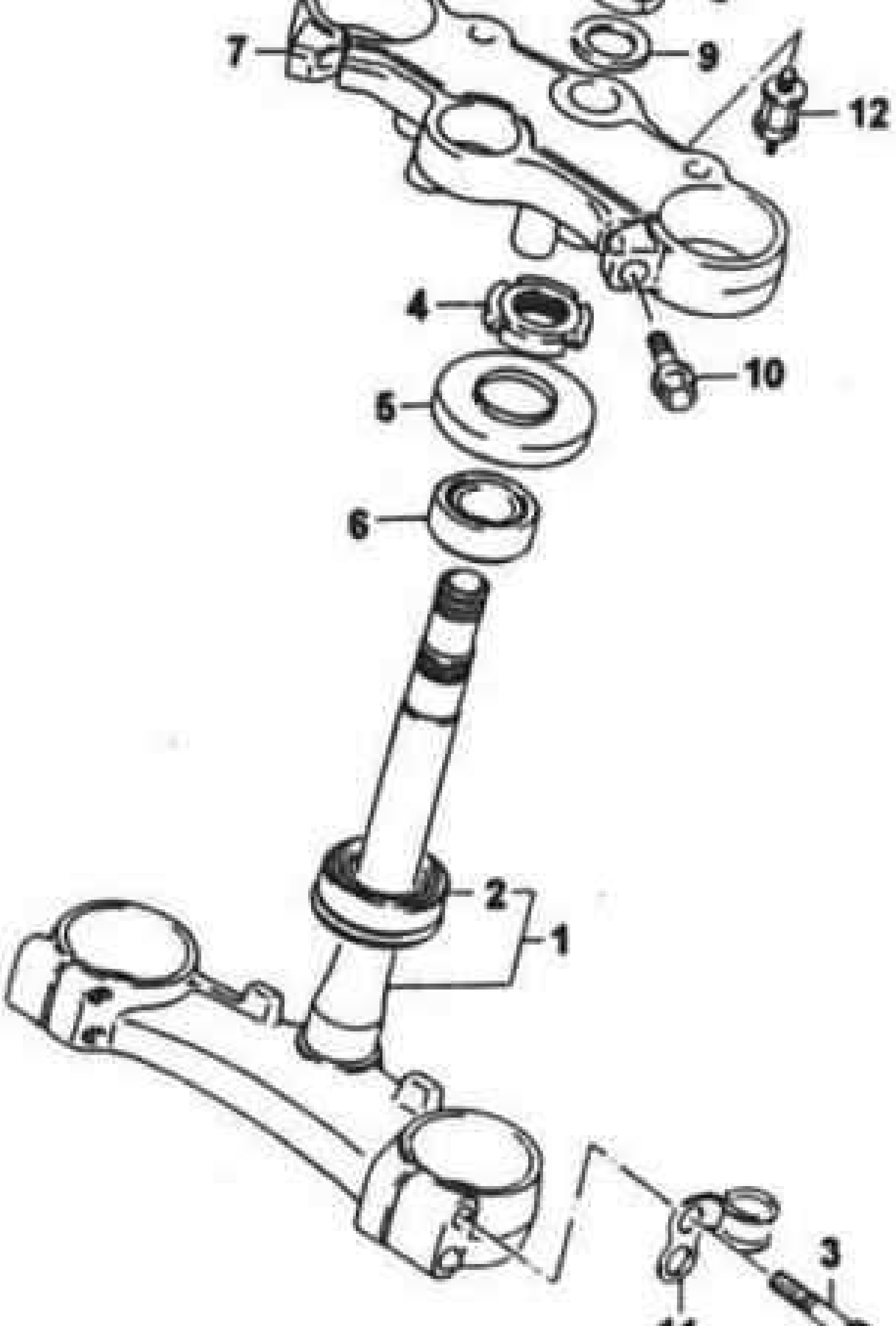
7
9
12
4
10
5
6
2
1
3